DocuSign Envelope ID: EF8475C0-0470-4E52-B5B5-25D92AE11799

State of California
Department of Fish and Wildlife

Memorandum

Date: June 22, 2022

To: Jennifer Moonjian
California Department of Transportation
50 Higuera Street
San Luis Obispo, CA 93401
Jennifer.Moonjian@dot.ca.gov

DocuSigned by:
Erin Chappell
B77E9A6211EF486...

From: Erin Chappell, Regional Manager
California Department of Fish and Wildlife-Bay Delta Region, 2825 Cordelia Road, Suite 100, Fairfield, CA 94534

Subject: Incidental Take Permit 2081-2022-011-03 for the State Route 9 – San Lorenzo River Bridge Replacement Project (EA 05-1H470), Santa Cruz County

Enclosed you will find an electronic copy of the Incidental Take Permit for the above referenced Project, which has been digitally signed by the California Department of Fish and Wildlife (CDFW). Please read the permit carefully and sign the acknowledgement on the permit **no later than 30 days from CDFW signature** and prior to initiation of ground-disturbing activities. You may return an electronic copy of the permit with digital signature to CESA@wildlife.ca.gov. Digital signatures shall comply with Government Code section 16.5. Alternatively, you may return a hard copy of the permit via mail to:

California Department of Fish and Wildlife
Habitat Conservation Planning Branch, CESA Permitting
Post Office Box 944209
Sacramento, CA 94244-2090

You are advised to keep the permit in a secure location and distribute copies to appropriate project staff responsible for ensuring compliance with the conditions of approval of the permit. Note that you are required to comply with certain conditions of approval prior to initiation of ground-disturbing activities. Additionally, a copy of the permit must be maintained at the project work site and made available for inspection by CDFW staff when requested.

The permit will not take effect until the signed acknowledgement is received by CDFW. If you wish to discuss these instructions or have questions regarding the permit, please contact Mr. Robert Stanley, Senior Environmental Scientist (Specialist), at Robert.Stanley@wildlife.ca.gov; or Mr. Wes Stokes, Senior Environmental Scientist (Supervisory), at Wesley.Stokes@wildlife.ca.gov.

Enclosures

DocuSign Envelope ID: EF8475C0-0470-4E52-B5B5-25D92AE11799

California Department of Fish and Wildlife
Bay Delta Region 3
2825 Cordelia Road, Suite 100
Fairfield, CA 94534

California Endangered Species Act
Incidental Take Permit No. 2081-2022-011-03

STATE ROUTE – 9 SAN LORENZO RIVER BRIDGE REPLACEMENT PROJECT – 1 (EA 05-1H470)

I. Authority:

This California Endangered Species Act (CESA) Incidental Take Permit (ITP) is issued by the California Department of Fish and Wildlife (CDFW) pursuant to Fish and Game Code section 2081, subdivisions (b) and (c), and California Code of Regulations, Title 14, section 783.0 et seq. CESA prohibits the take[1] of any species of wildlife designated by the California Fish and Game Commission as an endangered, threatened, or candidate species.[2] However, CDFW may authorize the take of any such species by permit pursuant to the conditions set forth in Fish and Game Code section 2081, subdivisions (b) and (c) (See Cal. Code Regs., tit. 14, § 783.4).

Permittee:	**California Department of Transportation**
Principal Officer:	**Jennifer Moonjiaan, Senior Environmental Planner**
Contact Person:	**Alexandra Thiel, (805) 441-8484**
Mailing Address:	**50 Higuera Street,San Luis Obispo, CA 93401**

II. Effective Date and Expiration Date of this ITP:

This ITP shall become effective when signed by all parties and received by CDFW as described in the Notices section of this ITP. Unless renewed by CDFW, this ITP and its authorization to take the Covered Species shall expire on **December 31, 2027**.

Notwithstanding the expiration date on the take authorization provided by this ITP, Permittee's obligations pursuant to this ITP do not end until CDFW accepts as complete the Permittee's Final Mitigation Report required by Condition of Approval 7.7 of this ITP.

III. Project Location:

The State Route 9 – San Lorenzo River Bridge Replacement Project (Project) is located on State Route 9 (SR-9) in Santa Cruz County near the community of Boulder Creek in the State

[1]Pursuant to Fish and Game Code section 86, "'take' means hunt, pursue, catch, capture, or kill, or attempt to hunt, pursue, catch, capture, or kill." (See also *Environmental Protection Information Center v. California Department of Forestry and Fire Protection* (2008) 44 Cal.4th 459, 507 [for purposes of incidental take permitting under Fish and Game Code section 2081, subdivision (b), "'take' … means to catch, capture or kill".)

[2]The definition of an endangered, threatened, and candidate species for purposes of CESA are found in Fish and Game Code sections 2062, 2067, and 2068, respectively.

of California (Figure 1). The San Lorenzo River Bridge (No. 36-0052) is located at post-mile (PM) 13.6, Latitude 37.1329, Longitude -122.1254.

IV. Project Description:

The Project includes the following work activities: 1) phased demolition of the existing five span T-girder style bridge 2) phased construction of a new free span bridge that is 106 feet long and 40 feet wide 3) installation of a temporary creek diversion system 4) restoration and enhancement of on-site habitat for Covered Species.

Bridge Demolition and Replacement

The existing bridge will be demolished and replaced with a clear span bridge. Those existing abutments were constructed by casting materials directly into the exposed bedrock within the stream channel, the abutments will be partially removed to minimize removal of bedrock and alteration of the stream channel. The new San Lorenzo River Bridge will be a free-span structure approximately 106 feet long and 40 feet wide. The new bridge will consist of 12-foot-wide lanes and 8-foot-wide shoulders. The bridge will be a pre-cast single-span structure. Thirty-six (36) cast-in-drilled-hole (CIDH) piles will support the new bridge (Figure 2; San Lorenzo Bridge Index to Plans, Sheet 2). Each pile is 24 inches in diameter and will be installed to a depth of 70 feet. A retaining wall approximately 80 feet long will be built near the northeast corner of the bridge (Figure 2; San Lorenzo Bridge Layout Sheet L-1) perpendicular to the active channel. Construction will be staged to allow for traffic passage during construction, with a single lane replaced one at a time. The existing metal beam guard rail (MBGR) will be replaced with a standard Midwest guardrail system (MGS). The top of the existing northern abutment will be lowered to approximately 6 feet beneath the bottom of the bridge deck. The adjacent slope will be graded to the top of the abutment to allow for wildlife passage and the new bridge deck will sit above the estimated 1% flood event high water mark. This will further reduce the potential for debris snags on structures (Figure 1).

Temporary Access

Access to the creek and staging area will occur at the northwest and southeast corners of the bridge. Access will require removal of 5 riparian trees (Figure 2; Tree Removal Plan Sheet PR-1) and disturbance of 1,179 square feet (44 cubic yards) of native soil and vegetation.

In-Channel Construction

In-Channel construction will partially remove the existing abutments and install a debris catchment system. The debris catchment system may remain in place throughout the duration of construction. A temporary support for the existing bridge to splice the new pre-cast bridge deck may be constructed to support the splicing of the new bridge. No impact pile driving is proposed at this location. The new abutments will be installed using the cast-in-drilled-hole (CIDH) method, all new abutments will be outside of Covered Species habitat.

Temporary Creek Diversion System

The temporary creek diversion system in the San Lorenzo River will consist of cofferdams, constructed from gravel bags, sheet piles or k-rails. Up to 1,775 cubic yards of Temporary fill within the channel will be required for the diversion structure. The diversion will be removed each year at the end of the in-water work window. The stream diversion will be required for three consecutive years of construction.

Utilities

Existing fiber optic, water lines connected to the San Lorenzo Bridge deck and overhead electrical lines will be temporarily relocated during construction. After construction is complete the overhead lines will be relocated within the state right-of-way and water line will be attached to the new bridge structure.

Nightwork

Night work will be required for Covered Activities that require full lane closures in both directions, including placement of girders.

Revegetation/Enhancement Work

Areas of temporary impact from temporary access, staging, excavation and fill operations adjacent to and within the bed, bank, channel and upland riparian habitat shall require the replacement of native vegetation and contouring of bed, bank and channel conditions to match pre-project upstream and downstream contours at the Project location

Equipment

The following equipment shall be employed; asphalt paver/roller, backhoe, bobcat, bulldozer/loader, compressor, concrete pump truck, concrete truck mixers, crane, dump truck, excavator, flatbed truck, forklift, front-end loader, man-lift, grader, haul truck, paint/striping truck, snooper and water truck.

V. Covered Species Subject to Take Authorization Provided by this ITP:

This ITP covers the following species:

Name	CESA Status[3]
1. Coho Salmon (*Oncorhynchus kisutch*) south of Punta Gorda (Humboldt County) also known as the Central California Coast (CCC) Evolutionarily Significant Unit (ESU)	Endangered[4]

[3] Under CESA, a species may be on the list of endangered species, the list of threatened species, or the list of candidate species.
[4]See Cal. Code Regs. tit. 14 § 670.5, subd. (a)(2)(N).

This species and only this species is the “Covered Species” for the purposes of this ITP.

VI. Impacts of the Taking on Covered Species:

Project activities and their resulting impacts are expected to result in the incidental take of individuals of the Covered Species. The activities described above expected to result in incidental take of individuals of the Covered Species include dewatering of the San Lorenzo River; installation and removal of the temporary creek diversion system over multiple seasons; demolition and removal of the existing bridge structure; grading; contaminants, and sediment mobilization and/or relocation activities prescribed by this ITP (Covered Activities).

Incidental take of individuals of the Covered Species in the form of mortality (“kill”) may occur as a result of Covered Activities such as exposure to suspended sediments, stranding in isolated pools, relocation from isolated pools, entrapment in temporary water diversion systems and contaminants released during demolition and construction. Incidental take of individuals of the Covered Species may also occur from the Covered Activities in the form of pursue, catch, capture, or attempt to do so of the Covered Species from relocation actions absent implementation of protective conditions. The areas where authorized take of the Covered Species is expected to occur include Covered Species habitat areas subject to Covered Activities, as shown in Figure 1 (collectively, the Project Area).

The Project is expected to cause the temporary loss of 0.08 acres of habitat for the Covered Species over 82 linear feet (Figure 1). Impacts of the authorized taking also include adverse impacts to the Covered Species related to temporal losses, water quality degradation and edge effects, and the Project’s incremental contribution to cumulative impacts (indirect impacts). These impacts include stress resulting from construction noise and vibrations and from capture and relocation; temporary habitat loss; permanent tree removal; and long-term effects due to increased pollution, increased competition for food and space, and increased vulnerability to predation.

VII. Incidental Take Authorization of Covered Species:

This ITP authorizes incidental take of the Covered Species and only the Covered Species. With respect to incidental take of the Covered Species, CDFW authorizes the Permittee, its employees, contractors, and agents to take Covered Species incidentally in carrying out the Covered Activities, subject to the limitations described in this section and the Conditions of Approval identified below. This ITP does not authorize take of Covered Species from activities outside the scope of the Covered Activities, take of Covered Species outside of the Project Area, take of Covered Species resulting from violation of this ITP, or intentional take of Covered Species except for capture and relocation of Covered Species as authorized by this ITP.

VIII. Conditions of Approval:

Unless specified otherwise, the following measures apply to all Covered Activities within the Project Area, including areas used for vehicular ingress and egress, staging and parking and noise and vibration generating activities that may cause take. CDFW's issuance of this ITP and Permittee's authorization to take the Covered Species are subject to Permittee's compliance with and implementation of the following Conditions of Approval:

1. **Legal Compliance:** Permittee shall comply with all applicable federal, state, and local laws in existence on the effective date of this ITP or adopted thereafter.

2. **CEQA Compliance:** Permittee shall implement and adhere to the mitigation measures related to the Covered Species in the Biological Resources section of the Mitigated Negative Declaration for the San Lorenzo River Bridge and Kings Creek Bridge Replacement Project (SCH No.: 2020120272) certified by the California Department of Transportation on February 9, 2021 as lead agency for the Project pursuant to the California Environmental Quality Act (CEQA) (Pub. Resources Code, § 21000 et seq.).

3. **LSA Agreement Compliance:** Permittee shall implement and adhere to the mitigation measures and conditions related to the Covered Species in the Lake and Streambed Alteration (LSA) Agreement Environmental Permit Management Information System (EPIMS) (Notification No. EPIMS-SCR-15964-R3) for the Project executed by CDFW pursuant to Fish and Game Code § 1600 et seq.

4. **ESA Compliance:** Permittee shall implement and adhere to the terms and conditions related to the Covered Species in the Formal Consultation on the San Lorenzo River Bridge and Kings Creek Bridge Replacement Project, Santa Cruz County, California (Caltrans EA 05-1H470) (Biological Opinion No. WCRO-2020-02273) for the Project pursuant to the Federal Endangered Species Act (ESA). For purposes of this ITP, where the terms and conditions for the Covered Species in the federal authorization are less protective of the Covered Species or otherwise conflict with this ITP, the conditions of approval set forth in this ITP shall control.

5. **ITP Time Frame Compliance:** Permittee shall fully implement and adhere to the conditions of this ITP within the time frames set forth below and as set forth in the Mitigation Monitoring and Reporting Program (MMRP), which is included as Attachment 1 to this ITP.

6. **General Provisions:**

   6.1. Designated Representative. Before starting Covered Activities, Permittee shall designate a representative (Designated Representative) responsible for communications with CDFW and overseeing compliance with this ITP. Permittee shall notify CDFW in writing before starting Covered Activities of the Designated Representative's name, business address, and contact information, and shall notify

CDFW in writing if a substitute Designated Representative is selected or identified at any time during the term of this ITP.

6.2. Designated Biologist(s), Biological Monitor(s). Permittee shall submit to CDFW in writing the name, qualifications, business address, and contact information of the Designated Biologist(s) and Biological Monitor(s) using the Biologist Resume Form (Attachment 2) or another format containing the same information at least 30 days before starting Covered Activities. Permittee shall ensure that the Designated Biologist(s) and Biological Monitor(s) are knowledgeable and experienced in the biology, natural history, collecting and handling of the Covered Species. The Designated Biologist(s) and Biological Monitor(s) shall be responsible for monitoring Covered Activities to help minimize and fully mitigate or avoid the incidental take of individual Covered Species and to minimize disturbance of Covered Species' habitat. Permittee shall obtain CDFW approval of the Designated Biologist(s) and Biological Monitor(s) in writing before starting Covered Activities and shall also obtain approval in advance, in writing, if the Designated Biologist(s) or Biological Monitor(s) must be changed.

6.3. Designated Biologist Authority. To ensure compliance with the Conditions of Approval of this ITP, the Designated Biologist shall immediately stop any activity that does not comply with this ITP and/or order any reasonable measure to avoid the unauthorized take of an individual of the Covered Species. Permittee shall provide unfettered access to the Project Site and otherwise facilitate the Designated Biologist in the performance of his/her duties. If the Designated Biologist is unable to comply with this ITP, then the Designated Biologist shall notify the CDFW Representative immediately. Permittee shall not enter into any agreement or contract of any kind, including but not limited to non-disclosure agreements and confidentiality agreements, with its contractors and/or the Designated Biologist that prohibit or impede open communication with CDFW, including but not limited to providing CDFW staff with the results of any surveys, reports, or studies or notifying CDFW of any non-compliance or take. Failure to notify CDFW of any non-compliance or take or injury of a Covered Species as a result of such agreement or contract may result in CDFW taking actions to prevent or remedy a violation of this ITP.

6.4. Education Program. Permittee shall conduct an education program for all persons employed or otherwise working in the Project Area before performing any work. The program shall consist of a presentation from the Designated Biologist that includes a discussion of the biology and general behavior of the Covered Species, information about the distribution and habitat needs of the Covered Species, sensitivity of the Covered Species to human activities, its status pursuant to CESA including legal protection, recovery efforts, penalties for violations and Project-specific protective measures described in this ITP. Permittee shall prepare and distribute wallet-sized cards or a fact sheet handout containing this information for workers to carry in the Project Area. Permittee shall provide interpretation for non-English speaking

workers, and the same instruction shall be provided to any new workers before they are authorized to perform work in the Project Area. Upon completion of the program, employees shall sign a form stating they attended the program and understand all protection measures. This training shall be repeated at least once annually for long-term and/or permanent employees that will be conducting work in the Project Area.

6.5. Construction Monitoring Documentation. The Designated Biologist(s) and Biological Monitor(s)shall maintain construction-monitoring documentation on-site in either hard copy or digital format throughout the construction period, which shall include a copy of this ITP with attachments and a list of signatures of all personnel who have successfully completed the education program. Permittee shall ensure a copy of the construction-monitoring documentation is available for review at the Project site upon request by CDFW.

6.6. Trash Abatement. Permittee shall initiate a trash abatement program before starting Covered Activities and shall continue the program for the duration of the Project. Permittee shall ensure that trash and food items are contained in animal-proof containers and removed, ideally at daily intervals but at least once a week, to avoid attracting opportunistic predators such as ravens, coyotes, and feral dogs.

6.7. Dust Control. Permittee shall implement dust control measures during Covered Activities to facilitate visibility for monitoring of the Covered Species by the Designated Biologist. Permittee shall keep the amount of water used to the minimum amount needed and shall not allow water to form puddles.

6.8. Erosion Control Materials. Permittee shall prohibit use of erosion control materials potentially harmful to Covered Species and other species. Use of monofilament synthetic netting (erosion control matting) or similar material shall be prohibited within the Project Area.

6.9. Delineation of Property Boundaries. Before starting Covered Activities along each part of the route in active construction Permittee shall clearly delineate the boundaries of the Project Area with fencing, stakes, or flags. Permittee shall restrict all Covered Activities to within the fenced, staked, or flagged areas. Permittee shall maintain all fencing, stakes, and flags until the completion of Covered Activities in that area.

6.10. Delineation of Habitat. Permittee shall clearly delineate habitat of the Covered Species within the Project Area with posted signs, posting stakes, flags, and/or rope or cord, and place fencing as necessary to minimize the disturbance of Covered Species' habitat.

6.11. Project Access. Project-related personnel shall access the Project Area using existing routes, or routes identified in the Project Description and shall not cross Covered Species' habitat outside of or en route to the Project Area. Permittee shall

restrict Project-related vehicle traffic to established roads, staging, and parking areas. Permittee shall ensure that vehicle speeds do not exceed 20 miles per hour to avoid Covered Species on or traversing the roads. If Permittee determines construction of routes for travel are necessary outside of the Project Area, the Designated Representative shall contact CDFW for written approval before carrying out such an activity. CDFW may require an amendment to this ITP, among other reasons, if additional take of Covered Species will occur as a result of the Project modification.

6.12. Staging Areas. Permittee shall confine all Project-related parking, storage areas, laydown sites, equipment storage, and any other surface-disturbing activities to the Project Area using, to the extent possible, previously disturbed areas. Additionally, Permittee shall not use or cross Covered Species' habitat outside of the marked Project Area unless provided for as described in Condition of Approval 6.11 of this ITP.

6.13. Hazardous Waste. Permittee shall immediately stop and, pursuant to pertinent state and federal statutes and regulations, arrange for repair and clean up by qualified individuals of any fuel or hazardous waste leaks or spills at the time of occurrence, or as soon as it is safe to do so. Permittee shall exclude the storage and handling of hazardous materials from the Project Area and shall properly contain and dispose of any unused or leftover hazardous products off-site.

6.14. CDFW Access. Permittee shall provide CDFW staff with reasonable access to the Project and shall otherwise fully cooperate with CDFW efforts to verify compliance with or effectiveness of mitigation measures set forth in this ITP.

6.15. Refuse Removal. Upon completion of Covered Activities, Permittee shall remove from the Project Area and properly dispose of all temporary fill and construction refuse, including, but not limited to, broken equipment parts, wrapping material, cords, cables, wire, rope, strapping, twine, buckets, metal or plastic containers, and boxes.

7. Monitoring, Notification and Reporting Provisions:

7.1. Notification Before Commencement. The Designated Representative shall notify CDFW 14 calendar days before starting Covered Activities and shall document compliance with all pre-Project Conditions of Approval before starting Covered Activities.

7.2. Notification of Non-compliance. The Designated Representative shall immediately notify CDFW if the Permittee is not in compliance with any Condition of Approval of this ITP, including but not limited to any actual or anticipated failure to implement measures within the time periods indicated in this ITP and/or the MMRP. The Designated Representative shall follow up within 24 hours with a written report to

CDFW describing, in detail, any non-compliance with this ITP and suggested measures to remedy the situation.

7.3. Compliance Monitoring. The Designated Biologist shall be on-site daily when Covered Activities occur including initial ground disturbance, vegetation removal or clearing, exclusionary fencing installation, concrete pours, concrete washouts, water diversion installation and water diversion removal. The Designated Biologist or Designated Representative (Approved in advance by CDFW) shall conduct compliance inspections each working day. The Designated Biologist or Designated Representative shall conduct compliance inspections to:

(1) minimize incidental take of the Covered Species;

(2) prevent unlawful take of species;

(3) check for compliance with all measures of this ITP;

(4) check all exclusion zones; and

(5) ensure that signs, stakes, and fencing are intact, and that Covered Activities are only occurring in the Project Area.

The Designated Representative or Designated Biologist shall prepare daily written observation and inspection records summarizing oversight activities and compliance inspections, observations of Covered Species and their sign, survey results, and monitoring activities required by this ITP. The frequency of biological monitoring and reporting will be assessed on an ongoing basis and will depend on the nature of the activities being conducted.

7.4. Monthly Compliance Report. The Designated Representative or Designated Biologist shall compile the observation and inspection records identified in Condition of Approval 7.3 into a Monthly Compliance Report and submit it to CDFW along with a copy of the MMRP table with notes showing the current implementation status of each mitigation measure. Monthly Compliance Reports shall be submitted to the CDFW offices listed in the Notices section of this ITP and via e-mail to CDFW's Regional Representative and Headquarters CESA Program. At the time of this ITP's approval, the CDFW Regional Representative is Robert Stanley, Senior Environmental Scientist (Specialist), (Robert.Stanley@wildlife.ca.gov) and Headquarters CESA Program email is CESA@wildlife.ca.gov. CDFW may at any time increase the timing and number of compliance inspections and reports required under this provision depending upon the results of previous compliance inspections. If CDFW determines the reporting schedule must be changed, CDFW will notify Permittee in writing of the new reporting schedule.

7.5. Annual Status Report. Permittee shall provide CDFW with an Annual Status Report (ASR) no later than January 31 of every year beginning with issuance of this ITP and continuing until CDFW accepts the Final Mitigation Report identified below. Each ASR shall include, at a minimum: (1) a summary of all Monthly Compliance Reports for that year identified in Condition of Approval 7.4; (2) a general description of the status of the Project Area and Covered Activities, including actual or projected completion dates, if known; (3) a copy of the table in the MMRP with notes showing the current implementation status of each mitigation measure; (4) an assessment of the effectiveness of each completed or partially completed mitigation measure in avoiding, minimizing and mitigating Project impacts; (5) all available information about Project-related incidental take of the Covered Species; (6) an accounting of the number of acres subject to both temporary and permanent disturbance, both for the prior calendar year, and a total since ITP issuance; and (7) information about other Project impacts on the Covered Species.

7.6. CNDDB Observations. The Designated Biologist shall submit all observations of Covered Species to CDFW's California Natural Diversity Database (CNDDB) within 60 calendar days of the observation and the Designated Biologist shall include copies of the submitted forms with the next Monthly Compliance Report or ASR, whichever is submitted first relative to the observation.

7.7. Final Mitigation Report. No later than 60 days after completion of all Covered Activities, Permittee shall provide CDFW with a Final Mitigation Report. The Designated Biologist shall prepare the Final Mitigation Report which shall include, at a minimum: (1) a summary of all Monthly Compliance Reports and all ASRs; (2) a copy of the table in the MMRP with notes showing when each of the mitigation measures was implemented; (3) all available information about Project-related incidental take of the Covered Species; (4) information about other Project impacts on the Covered Species; (5) beginning and ending dates of Covered Activities; (6) an assessment of the effectiveness of this ITP's Conditions of Approval in minimizing and fully mitigating Project impacts of the taking on Covered Species; (7) recommendations on how mitigation measures might be changed to more effectively minimize take and mitigate the impacts of future projects on the Covered Species; and (8) any other pertinent information.

7.8. Notification of Take or Injury/Damage. Permittee shall immediately notify the Designated Biologist if a Covered Species is taken or injured/damaged by a Project-related activity, or if a Covered Species is otherwise found dead or injured/damaged within the vicinity of the Project. The Designated Biologist or Designated Representative shall provide initial notification to CDFW by calling the Regional Office at (707) 428-2002. Initial notification shall also be provided to the CDFW Regional Representative is Robert Stanley, Senior Environmental Scientist (Specialist), (707) 339-6534 (Robert.Stanley@wildlife.ca.gov). The initial notification to CDFW shall include information regarding the location, species, and number of

animals taken or injured/damaged and the ITP Number (2081-2022-011-03). Following initial notification, Permittee shall send CDFW a written report within two calendar days. The report shall include the date and time of the finding or incident, location of the animal or carcass, and if possible, provide a photograph, explanation as to cause of take or injury/damage, and any other pertinent information.

8. **Take Minimization Measures:** The following requirements are intended to ensure the minimization of incidental take of Covered Species in the Project Area during Covered Activities. Permittee shall implement and adhere to the following conditions to minimize take of Covered Species:

8.1. Seasonal Work Window and Weather. Permittee shall limit Covered Activities to the period between June 1 and October 15, until the expiration of this ITP, unless otherwise authorized in writing by CDFW. Permittee shall monitor the National Weather Service 72-hour forecast for the Project Area. No Covered Activities shall occur during a rain event and in dry weather only within the Project Area. No Project activities will be started if the associated erosion control measures cannot be completed prior to the onset of precipitation. No Covered Activities shall occur if there is a 40 percent chance of precipitation or greater in the National Weather Service 72-hour forecast for the Project Area. Covered Activities may continue 24 hours after the rain ceases if there is less than a 40 percent chance of precipitation in the 24-hour forecast for the Project Area.

8.2. Time of Day Work Restriction. For any activity that will clear, grub, remove existing unpaved features, excavate embankments, remove existing drainage features, construct new drainage features or excavate soil that is not covered by a paved area, the Permittee shall terminate all Covered Activities 30 minutes before sunset and shall not resume Covered Activities until 30 minutes after sunrise unless approved by the CDFW Representative in writing. The Permittee shall use sunrise and sunset times established by the U.S. Naval Observatory Astronomical Applications Department for determining when Covered Activities shall terminate and resume.

8.3. Temporary Work Platform and Debris Catchment System Streambed Protection Plan. A minimum of 30 days prior to the initiation of construction the Permittee shall provide a Temporary Work Platform and Debris Catchment System Streambed Protection Plan. The plan shall provide design plans of any temporary work platforms or debris catchment systems. The plan shall also describe how the Permittee will prevent excessive dust, debris and material from entering Covered Species habitat. This may include overlay of visqueen, installation of additional catch-basin systems or utilization of a timber work platform with visqueen underlay during demolition, removal and subsequent construction.

8.4. Pre-Construction Covered Species Check. Forty-Eight (48) hours prior to the start of construction, the Designated Biologist shall inspect the Project Area for any Covered

Species or aquatic species. Aquatic species shall be removed by the Designated Biologist and translocated to a safe location as specified in Condition of Approval 8.7.

8.5. Daily Aquatic Species Checks. Before the start of work each day and throughout the course of the day as determined by the Designated Biologist, the Project Area shall be inspected for any Covered Species or aquatic species as specified in Condition of Approval 8.7. Aquatic species shall be removed by the Designated Biologist and translocated to a safe location as specified in Condition of Approval 8.7.

8.6. Dewatering and Diversion. A minimum of 30 days prior to the initiation of construction the Permittee shall submit for CDFW review and acceptance in writing (via e-mail) a creek diversion/dewatering system. The creek diversion shall be removed each season by October 15 as specified in Condition of Approval 8.1. The Permittee shall implement the following during dewatering and water diversion:

a) Cofferdams shall be constructed of a non-erodible material which does not contain soil or fine sediment. Sheet piles, gravel-filled bags and/or k-rails shall be used to construct a dam to isolate the stream from its existing channel and re-direct flows out of the excavation area. Bags for gravel bags will be made of burlap or woven synthetic material. The bags will be of sufficient size and strength to hold a minimum of 1.0-cubic-foot of clean gravel, when they are filled to 50 percent of their full capacity. The durability of the burlap will be rated as 10-ounce burlap. The ties and burlap will be made of natural materials. The gravel-filled revetment will be wrapped in plastic to further seal the flow and prevent entrapment of Covered Species.

b) Cofferdams and the stream diversion system shall remain in place and functional throughout the seasonal work window construction period. If the cofferdams or stream diversion fail, Permittee shall repair them immediately.

c) When the cofferdam or other artificial obstruction is being constructed, maintained, or placed in operation, sufficient water shall be allowed to pass downstream of the excavation to maintain aquatic life below the dam. Flow shall be of sufficient quality, quantity and temperature to support fish and other aquatic species both above and below the diversion. The cofferdam materials shall be constructed of non-polluting materials.

d) To minimize the potential for Covered Species to be entrained during de-watering activities, Permittee shall establish a Covered Species exclusion barrier and shall place the pump intakes away from complex vegetated banks that may contain habitat for Covered Species. Pump intakes shall be placed away from complex vegetated banks that may contain habitat for Covered Species. Screen material may be constructed of any rigid woven, perforated, or slotted material that provides water passage while physically excluding fish. Round openings in the screen shall not exceed 3/32-inch diameter, square

openings shall not exceed 3/32-inch measured diagonally, and slotted openings shall not exceed 0.069 inches in width. Approach velocity shall not exceed 0.33 feet per second.

e) Permittee shall select and install site exclusion methods to ensure that Covered Species cannot reenter the Project Area or become impinged on exclusion net or screen. The Designated Biologist shall regularly monitor site exclusion.

f) The Designated Biologist shall monitor dewatering at all times. The Designated Biologist shall reduce the rate of diversion as needed to avoid impacts to Covered Species. The Designated Biologist shall monitor upstream and downstream reaches to ensure no Covered Species are stranded or in distress during reduction of flows.

g) During excavation, Permittee shall install and maintain check-dams or equivalent sediment control methods as necessary to trap and control sediment-laden water. Permittee shall remove any turbid water and sediment present in the work area prior to restoring water flow through the project site and place them in a location where they cannot enter waters of the state.

h) Reintroduction of stream flows shall be gradual to the isolated work area to prevent stranding, channel instability, or excessive scour. The Designated Biologist shall monitor upstream and downstream reaches to ensure no Covered Species are stranded or in distress during reintroduction of flows. If conditions causing or contributing to stress and/or injury are observed, Permittee shall take immediate remedial actions directed at lessening sources of stress. This may include a more gradual reintroduction of flows to avoid abrupt water surface elevation changes both downstream and upstream of the Project Area.

i) In the event that work must be phased, Permittee shall remove all cofferdam material prior to the onset of high flows.

8.7. Covered Species Rescue Plan. The Permittee shall implement a Covered Species Rescue Plan to be implemented during Project exclusion and stream diversion operations for all species covered under this ITP. The Covered Species Rescue Plan shall include at minimum the following:

a) Covered Species capture and relocation shall be conducted by or under the direct supervision of the CDFW-approved Designated Biologist, as required by Condition of Approval 6.2.

b) Prior to the installation of cofferdams and subsequent Covered Activities, the Designated Biologist shall capture and relocate Covered Species to the nearest predetermined release location, approved in advance by CDFW.

DocuSign Envelope ID: EF8475C0-0470-4E52-B5B5-25D92AE11799

c) Before capture and relocation of Covered Species, the Designated Biologist shall identify the most appropriate release location(s). Permittee shall submit the proposed release locations to CDFW for review and acceptance prior to commencement of Covered Activities. Release locations shall provide suitable habitat for Covered Species and shall be selected to minimize the likelihood of Covered Species reentering the work area.

d) All dip nets used to capture Covered Species shall be made of a soft braded nylon material that is non-abrasive. Mesh sizing shall be matched to species and the life stages likely encountered.

e) Relocation activities shall be performed in the morning if maximum daytime air temperatures are expected to exceed 23 °C (~75 °F).

f) Electroshocking shall be conducted using the *National Marine Fisheries Service Guidelines for Electrofishing Waters Containing Salmonids Listed Under the Endangered Species Act*, June 2000. http://www.westcoast.fisheries.noaa.gov/publications/reference_documents/esa_refs/section4d/electro2000.pdf.

g) Captured Covered Species must be kept in a closable container in an adequate amount of cool, clean, well-oxygenated water (e.g., a cooler with lid containing stream water and a battery-operated air stone). Water temperature shall be monitored and kept below 60°F. If necessary, water shall be cooled with ice without introducing ice-borne chemical contaminants. Transport containers shall have a water volume of no less than 5 gallons, preferably more. Covered Species density in the transport container shall not exceed 10 Covered Species (40-80mm) per gallon of water. Collected Covered Species shall not be anesthetized at any point during the rescue operation.

h) No employee or contractor shall remove any Covered Species, dead or alive, from the site for personal use. All efforts to reduce the time that live Covered Species are out of the water shall be made to reduce the chances of incidental take during the capture and relocation. All Covered Species are to be promptly returned to the water with the exception of mortality.

i) Efforts shall be made to reduce capture and handling stress, minimize the time that Covered Species are held in buckets, and minimize handling stress during processing and release. Covered Species shall not be held in containers with other species. Covered Species shall be processed first and relocated as soon as possible. Species name and length data shall be recorded on data sheets, as well as time, date, location, gear type, water temperature, and any other pertinent observations of the Covered Species. Permittee shall provide Covered Species capture data to CDFW in the Monthly Compliance Report, as required by Condition of Approval 7.5.

j) Permittee shall preserve dead individuals by freezing or placing in a sealed container with 10 percent formalin solution. Information on time and exact location of any incidental take, method of take, length of time from death to preservation, water temperature, and any other relevant information will be recorded in writing. Permittee shall contact the CDFW regional representative for instructions on transmitting preserved individuals. Any take of non-Covered Species shall be documented and included in the Monthly and Final Mitigation Reports, as required by Condition of Approval 7.5 and 7.7.

k) After the Covered Species relocation effort is completed, if additional Covered Species are observed, Permittee shall cease Covered Activities until those individuals have been relocated. The Designated Biologist shall remain at the site during Covered Activities to capture and relocate additional Covered Species as necessary.

l) After completing the rescue, the Designated Biologist shall prepare a brief documentation report. The report shall include information on the personnel conducting the rescue, methods used, numbers of each species collected and relocated, length data, and estimate of the survival immediately after release. Photographs of the site and rescue operations shall be included. The report shall be provided by the Permittee to CDFW in the next Monthly Compliance Report required by Condition 7.4 and 7.5 and in the Annual and Final Mitigation Reports, Condition of Approval 7.5 and 7.7.

8.8. Permanent Lighting Prohibition. No new or replacement of existing permanent light sources are authorized under the terms of this ITP.

8.9. Temporary Lighting Avoidance and Minimization. All temporary Project lighting associated with construction staging areas, access routes and construction sites shall be shut down upon the completion of work each day and not used as security lighting overnight. Temporary Project lighting on the surface of the road shall be directed towards the road surface and shall not be directed into areas outside of the road surface to prevent additional light pollution and disruption of nocturnal wildlife activity. Baffles and various shading devices may be employed.

8.10. Concrete Curing. All concrete used shall be excluded from the wetted channel or areas where it may come into contact with water for a period of 30 days after it is poured/sprayed. Commercial sealants may be applied to the poured concrete surface where difficulty in excluding flow for a long period may occur. If sealant is used the proponent shall follow the instructions as noted on the product label. All sealants shall be approved in advance, in writing by CDFW prior to their use on-site. As an alternative, water quality testing and analysis may be conducted in coordination with CDFW. Results shall be submitted and accepted by CDFW prior to removal of the temporary diversion system that will re-introduce flows to new concrete.

8.11. Spill Containment and Clean Up. Prior to entering the work site, all field personnel shall know the location of spill kits and trained in their appropriate use. All activities performed in or near a river, stream, or lake shall have absorbent materials designated for spill containment and cleanup activities on-site for use in an accidental spill. CDFW shall be notified by the Permittee within 24 hours of all spills and consulted regarding clean-up procedures.

8.12. Decontamination of Clothing and Equipment. Any equipment that will enter the channel during construction will be decontaminated before and after construction to prevent the spread of aquatic diseases, such as ranavirus, and invasive aquatic species. Workers that will enter the riparian area, bed, bank or channel must also decontaminate waders, boots and other clothing that will come in direct contact with the water. Decontamination of clothing and equipment will be done through by selecting one of the following:

a) Drying equipment without washing, in an upland location following last aquatic use. If average daytime temperatures exceed 80 F, drying times will be at least 7 days. If average daytime temperatures are below 80 F, drying times will be at least 30 days.

b) Scalding water wash (at least 140 F) with varying high- and low-pressure spray to dislodge pathogens, vegetation, and contaminated sediment.

c) Freezing at a temperature of less than 32 F for more than 72 hours.

d) Soaking in a CDFW-approved disinfectant solution for at least two minutes (or longer, depending on the disinfectant used). To avoid harm to non-target species, disinfected clothing and equipment will be thoroughly rinsed in a water bath before entering the stream.

e) Repeat decontamination is required only if the equipment/clothing is removed from the site, used within a different water body, and returned to the Project site. Decontamination will take place in an upland location, preferably in the staging area, and any chemicals used during decontamination will be prevented from entering water bodies or storm water drains.

8.13. Rock Slope Protection Filter Fabric Prohibition. No rock slope protection (RSP) filter fabric, geo-textile material or similar plastic-derived materials are authorized for permanent use within the Project Area under the terms of this ITP.

9. Habitat Management Land Acquisition and Restoration: CDFW has determined that habitat restoration, enhancement and long-term management of compensatory habitat is necessary and required pursuant to CESA to fully mitigate Project-related impacts of the taking on the Covered Species that will result with implementation of the Covered Activities. This determination is based on factors including an assessment of the

importance of the habitat in the Project Area, the extent to which the Covered Activities will impact the habitat, and CDFW's estimate of the acreage required to provide for adequate compensation.

To meet this requirement, the Permittee shall restore approximately 0.08 acres of temporary aquatic and riparian habitat disturbance on-site, enhance and restore approximately 50 linear feet of riparian habitat on-site that is contiguous with other Covered Species habitat and install a Covered Species Rootwad fascine bundle/willow habitat features, and manage the Habitat Management (HM) pursuant to Conditions of Approval 9.3 below. Long-term funding for monitoring and management of created Covered Species habitat must be complete before starting Covered Activities or within 18 months of the effective date of this ITP if Security is provided pursuant to Condition of Approval 10 below for all uncompleted obligations.

9.1. Cost Estimates. CDFW has estimated the cost of habitat creation, restoration, and long-term management of Covered Species habitat creation and restoration of temporarily disturbed habitat as follows:

9.1.1. On-Site habitat restoration and enhancement costs for a total of 0.08 acres of Covered Species riparian and aquatic habitat including 50 linear feet of dense willow staking and a wildlife crossing under the new bridge structure estimated at **$26,168.00**.

9.1.2. Long-term management funding as described in Condition of Approval 9.2, estimated at **$38,607.00**. Management funding is estimated initially for the purpose of providing Security to ensure implementation of habitat creation, restoration, monitoring and management.

9.1.3. All costs associated with CDFW engaging an outside contractor to complete the mitigation tasks, including but not limited to acquisition, protection, and perpetual funding and management of the HM lands and restoration of temporarily disturbed habitat. These costs include but are not limited to the cost of issuing a request for proposals, transaction costs, contract administration costs, and costs associated with monitoring the contractor's work **$40,000.00**.

9.2. Management Fund. The Permittee shall ensure that HM lands are managed, maintained, and monitored as described in this ITP. Permittee shall provide ten years of monitoring and management funding for activities outlined in the final accepted Habitat Enhancement and Long-Term Management Plan consistent with Measure 9.3 below.

9.3. On-Site Habitat Enhancement Plan. The Permittee shall be responsible for submitting an On-Site Habitat Enhancement Plan to address an area of at least 0.08 acres. The plan shall be submitted to CDFW for written review and acceptance at least 30 days prior to the initiation of Covered Activities. The plan shall address

revegetating all access routes, staging areas and areas of temporary impacts within Covered Species habitat. Areas that are shaded by the bridge or unvegetated prior to construction do not require revegetation and shall only require contouring and grading to match pre-project conditions. All other applicable areas of barren soil or upland habitat shall be hydro-seeded or planted with native vegetation appropriate to the Project Site. The plan shall include 50 liner feet of willow staking. All on-site tree and woody vegetation plantings shall be subject to a ten-year monitoring period as specified in Condition 9.3.1 and 75% success criteria for survivorship. All hydro-seeding shall be monitored and compared utilizing before and after images to determine success. If hydro-seeding does not take hold within 6 months, additional applications shall be required. If any tree or woody vegetation plantings fail, additional plantings shall be required and additional years of monitoring shall be required in consultation with CDFW until the success criteria are achieved as noted above. All disturbed areas shall be monitored and controlled for invasive species rated as “High” by the California Invasive Plant Council's database, which is accessible at: https://www.cal-ipc.org/plants/inventory/. All locations shall be required to obtain a 10% or less ground cover percentage for species rated as “High” annually for five-years as specified in this Agreement. Reference site analysis and final approval of an enhancement site as having all obligations met may be accepted upon written request and written approval from CDFW. Alternative concepts for enhancement, such as land acquisition or permanent protection may be considered upon written request and written approval to CDFW. All temporary irrigation systems shall be removed upon completion of site enhancements or at such a time when supplemental watering is no longer required.

9.3.1. On-Site Habitat Enhancement Plan Monitoring and Reporting. The Permittee shall submit an On-Site Habitat Enhancement Report to CDFW by December 31 over a ten-year period, as well as any additional years, as applicable. Annual monitoring will be submitted for years 1 through 5 and in Year 7 and 10. A reduction in monitoring and reporting may be authorized upon written request and approval from CDFW. The report shall include success criteria milestones. The report shall also include photos from designated photo stations, a summary of site conditions and a list of wildlife observed on site. The report shall also include a list of corrective actions that may be necessary to increase the probability of native plant recruitment or habitat improvement to the Project Area.

9.3.2. On-Site Channel Analysis. A qualified professional, such as a fluvial geomorphologist or hydraulic engineer or other qualified professional (approved in advance by CDFW) shall develop a channel analysis monitoring program in coordination with CDFW to analyze channel conditions a minimum of 30 days prior to Covered Activities as baseline. The survey shall also document any post-construction channel forming events over the monitoring period as specified in Condition 9.3.1. Photo monitoring and/or video monitoring during the most likely channel forming event timeframe is recommended. All On-Site

Channel analysis results shall be provided as a sub-section of the On-Site Enhancement Plan Annual Monitoring Report.

9.3.3. On-Site Covered Species Habitat Improvement. Clean spawning-sized gravel (2- to 4-inch creek-run rock) shall be used for any gravel fill that is required for creek diversions. The Permittee shall remove fill material to the extent feasible during diversion removal; any rock that cannot be collected will be left in streambed to enhance Covered-Species habitat.

10. Security: The Permittee may proceed with Covered Activities only after the Permittee has ensured funding (Security) to complete any activity required by Condition of Approval 9 that has not been completed before Covered Activities begin. Permittee shall provide Security as follows:

10.1. Master Funding Agreement. Security for this ITP shall be governed by the Master Funding Agreement between the California Department of Fish and Wildlife and the California Department of Transportation, dated September 3, 2021.

10.2. Funding Memorandum. Permittee has prepared and CDFW has approved, the project-specific Funding Memorandum required by the Master Funding Agreement and attached to this ITP as Attachment 3.

10.3. Security Amount. The Security shall be in the amount of **$104,775.00**. This amount is based on the cost estimates identified in Condition of Approval 9.1 above and the Funding Memorandum.

10.4. Funding of the Child Expenditure Authorization (EA). Permittee has created and funded the Child EA with funds equivalent to the Security Amount.

10.5. Compliance with the Master Funding Agreement. Permittee shall complete all requirements set forth in the Master Funding Agreement and shall at all times comply with the terms and conditions of that Agreement.

Even if Security is provided, the Permittee must complete the required acquisition, protection and transfer of all HM lands and record any required conservation easements no later than 18 months from the effective date of this ITP. CDFW may require the Permittee to provide additional HM lands and/or additional funding to ensure the impacts of the taking are minimized and fully mitigated, as required by law, if the Permittee does not complete these requirements within the specified timeframe.

IX. Amendment:

This ITP may be amended as provided by California Code of Regulations, Title 14, section 783.6, subdivision (c), and other applicable law. This ITP may be amended without the concurrence of the Permittee as required by law, including if CDFW determines that

continued implementation of the Project as authorized under this ITP would jeopardize the continued existence of the Covered Species or where Project changes or changed biological conditions necessitate an ITP amendment to ensure that all Project-related impacts of the taking to the Covered Species are minimized and fully mitigated.

X. Stop-Work Order:

If CDFW determines the Permittee has violated any term or condition of this ITP or has engaged in unlawful take, CDFW may issue Permittee a written stop-work order instructing the Permittee to suspend any Covered Activity for an initial period of up to 30 days or risk suspension or revocation of this ITP. CDFW can issue a stop-work order to prevent or remedy a violation of this ITP, including but not limited to the failure to comply with reporting or monitoring obligations, or to prevent the unauthorized take of any CESA endangered, threatened, or candidate species, regardless of whether that species is a Covered Species under this ITP. Permittee shall stop work immediately as directed by CDFW upon receipt of any such stop-work order. Upon written notice to Permittee, CDFW may extend any stop-work order issued to Permittee for a period not to exceed 30 additional days.

If Permittee fails to remedy the violation or to comply with a stop-work order, CDFW may proceed with suspension and revocation of this ITP. Suspension and revocation of this ITP shall be governed by California Code of Regulations, Title 14, section 783.7, and any other applicable law. Neither the Designated Biologist nor CDFW shall be liable for any costs incurred in complying with stop-work orders.

XI. Liability:

All terms and conditions of this ITP shall be binding upon each Permittee. Notwithstanding California Civil Code section 1431 or any other provision of law, each Permittee shall be jointly and severally liable for performance of all terms, conditions, and obligations of this ITP and shall be jointly and severally liable for any unauthorized take or other violations of this ITP, whether committed by Permittees or any person acting on behalf of one or more Permittees, including their officers, employees, representatives, agents or contractors and subcontractors. Any failure by one or more Permittees to comply with any term, condition, or obligation herein shall be deemed a failure to comply by all Permittees.

XII. Compliance with Other Laws:

This ITP sets forth CDFW's requirements for the Permittee to implement the Project pursuant to CESA. This ITP does not necessarily create an entitlement to proceed with the Project. Permittee is responsible for complying with all other applicable federal, state, and local law.

XIII. Notices:

The Permittee shall sign and return this ITP to CDFW. A manual or digital signature is acceptable, provided a digital signature complies with Government Code section 16.5. Digital signatures facilitated by CDFW will be automatically returned. Manual (wet) signatures on

duplicate original paper copies shall be returned by the Permittee via registered first-class mail or overnight delivery to the following address:

Habitat Conservation Planning Branch
California Department of Fish and Wildlife
Attention: CESA Permitting Program
Post Office Box 944209
Sacramento, CA 94244-2090

Written notices, reports and other communications relating to this ITP shall be delivered to CDFW by email or registered first class mail at the following address, or at addresses CDFW may subsequently provide the Permittee. Notices, reports, and other communications shall reference the Project name, Permittee, and ITP Number (2081-2022-011-03) in a cover letter and on any other associated documents.

Original cover with attachment(s) to:

Erin Chappell, Regional Manager
California Department of Fish and Wildlife
Bay Delta Region
2825 Cordelia Road, Suite 100
Fairfield, CA 94534
Telephone (707) 428-2002
R3CESA@wildlife.ca.gov

and a copy to:

Habitat Conservation Planning Branch
California Department of Fish and Wildlife
Attention: CESA Permitting Program
Post Office Box 944209, Sacramento, CA 94244-2090
CESA@wildlife.ca.gov

Unless Permittee is notified otherwise, CDFW's Regional Representative for purposes of addressing issues that arise during implementation of this ITP is:

Robert Stanley, Senior Environmental Scientist (Specialist)
California Department of Fish and Wildlife
Bay Delta Region
2825 Cordelia Road, Suite 100
Fairfield, CA 94534
Telephone (707) 339-6534
Robert.Stanley@wildlife.ca.gov

XIV. Compliance with the California Environmental Quality Act:

CDFW's issuance of this ITP is subject to CEQA. CDFW is a responsible agency pursuant to CEQA with respect to this ITP because of prior environmental review of the Project by the lead agency, California Department of Transportation. (See generally Pub. Resources Code, §§ 21067, 21069). The lead agency's prior environmental review of the Project is set forth in the San Lorenzo River Bridge and Kings Creek Bridge Replacement Project (SCH No.: 2020120272) dated February 2021 that the California Department of Transportation certified for the San Lorenzo River Bridge and Kings Creek Bridge Replacement Project on February 9, 2021. At the time the lead agency certified the Mitigated Negative Declaration and approved the Project it also adopted various mitigation measures for the Covered Species as conditions of Project approval.

This ITP, along with CDFW's related CEQA findings, which are available as a separate document, provide evidence of CDFW's consideration of the lead agency's Mitigated Negative Declaration for the Project and the environmental effects related to issuance of this ITP (CEQA Guidelines, § 15096, subd. (f)). CDFW finds that issuance of this ITP will not result in any previously undisclosed potentially significant effects on the environment or a substantial increase in the severity of any potentially significant environmental effects previously disclosed by the lead agency. Furthermore, to the extent the potential for such effects exists, CDFW finds adherence to and implementation of the Conditions of Project Approval adopted by the lead agency, and that adherence to and implementation of the Conditions of Approval imposed by CDFW through the issuance of this ITP, will avoid or reduce to below a level of significance any such potential effects. CDFW consequently finds that issuance of this ITP will not result in any significant, adverse impacts on the environment.

XV. Findings Pursuant to CESA:

These findings are intended to document CDFW's compliance with the specific findings requirements set forth in CESA and related regulations. (Fish & G. Code § 2081, subs. (b)-(c); Cal. Code Regs., tit. 14, §§ 783.4, subds, (a)-(b), 783.5, subd. (c)(2)).

CDFW finds based on substantial evidence in the ITP application, San Lorenzo River Bridge and Kings Creek Bridge Replacement Project Mitigated Negative Declaration, National Marine Fisheries Service Biological Opinion, the results of site visits and consultations, and the administrative record of proceedings, that issuance of this ITP complies and is consistent with the criteria governing the issuance of ITPs pursuant to CESA:

(1) Take of Covered Species as defined in this ITP will be incidental to the otherwise lawful activities covered under this ITP;

(2) Impacts of the taking on Covered Species will be minimized and fully mitigated through the implementation of measures required by this ITP and as described in the MMRP. Measures include: (1) permanent habitat protection; (2) establishment of avoidance zones; (3) worker education; and (4) Monthly Compliance reports. CDFW evaluated

factors including an assessment of the importance of the habitat in the Project Area, the extent to which the Covered Activities will impact the habitat, and CDFW's estimate of the acreage required to provide for adequate compensation. Based on this evaluation, CDFW determined that the [protection and management in perpetuity of 0.08 acres of compensatory habitat that is contiguous with other protected Covered Species habitat and/or is of higher quality than the habitat being destroyed by the Project, along with the minimization, monitoring, reporting, and funding requirements of this ITP minimizes and fully mitigates the impacts of the taking caused by the Project;

(3) The take avoidance and mitigation measures required pursuant to the conditions of this ITP and its attachments are roughly proportional in extent to the impacts of the taking authorized by this ITP;

(4) The measures required by this ITP maintain Permittee's objectives to the greatest extent possible;

(5) All required measures are capable of successful implementation;

(6) This ITP is consistent with any regulations adopted pursuant to Fish and Game Code sections 2112 and 2114;

(7) Permittee has ensured adequate funding to implement the measures required by this ITP as well as for monitoring compliance with, and the effectiveness of, those measures for the Project; and

(8) Issuance of this ITP will not jeopardize the continued existence of the Covered Species based on the best scientific and other information reasonably available, and this finding includes consideration of the species' capability to survive and reproduce, and any adverse impacts of the taking on those abilities in light of (1) known population trends; (2) known threats to the species; and (3) reasonably foreseeable impacts on the species from other related projects and activities. Moreover, CDFW's finding is based, in part, on CDFW's express authority to amend the terms and conditions of this ITP without concurrence of the Permittee as necessary to avoid jeopardy and as required by law.

XVI. Attachments:

FIGURE 1	Map of Project Location for 05-1H470
FIGURE 2	95% Project Plans for 05-1H470
ATTACHMENT 1	Mitigation Monitoring and Reporting Program
ATTACHMENT 2	Biologist Resume Form
ATTACHMENT 3	Master Funding Agreement Funding Memorandum

ISSUED BY THE CALIFORNIA DEPARTMENT OF FISH AND WILDLIFE

on 6/22/2022**.**

DocuSigned by:
Erin Chappell
B77E9A6211EF486...

Erin Chappell, Regional Manager
Bay Delta Region

ACKNOWLEDGMENT

The undersigned: (1) warrants that he or she is acting as a duly authorized representative of the Permittee, (2) acknowledges receipt of this ITP, and (3) agrees on behalf of the Permittee to comply with all terms and conditions.

By: DocuSigned by: Jennifer Moonjian 066705854C40434... Date: 6/22/2022

Printed Name: Jennifer Moonjian Title: Senior Environmental Planner

DocuSign Envelope ID: EF8475C0-0470-4E52-B5B5-25D92AE11799

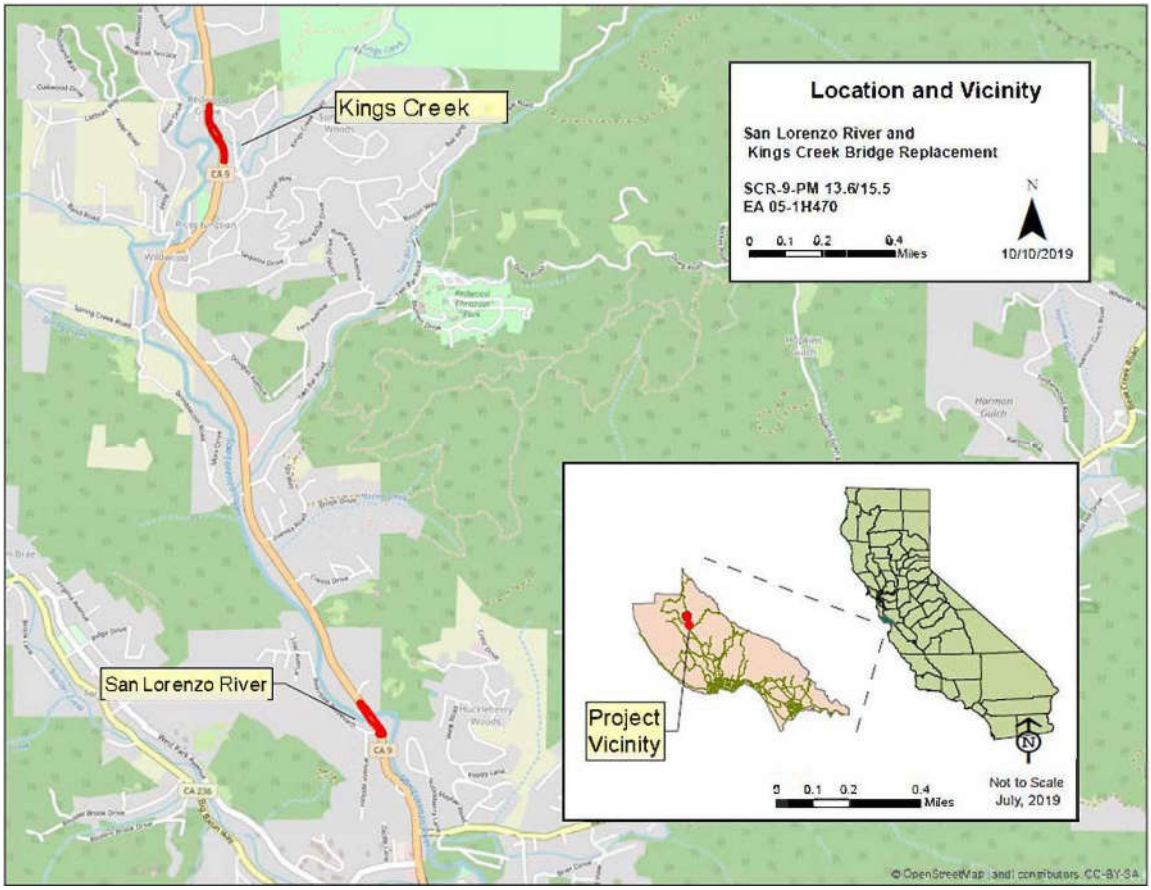

Figure 1. Project Location and Vicinity

DocuSign Envelope ID: EF8475C0-0470-4E52-B5B5-25D92AE11799

INDEX OF PLANS

Dist	COUNTY	LOCATION CODE	POST MILES TOTAL PROJECT	SHEET No.	TOTAL SHEETS
05	SCr	9	13.6, 15.5	1	X

STATE OF CALIFORNIA

DEPARTMENT OF TRANSPORTATION

PROJECT PLANS FOR BUILDING CONSTRUCTION

STATE HIGHWAY

IN SANTA CRUZ COUNTY NEAR BOULDER CREEK AT SAN LORENZO RIVER BRIDGE AND AT KINGS CREEK BRIDGE

TO BE SUPPLEMENTED BY STANDARD PLANS DATED OCTOBER 2018

LOCATION MAP

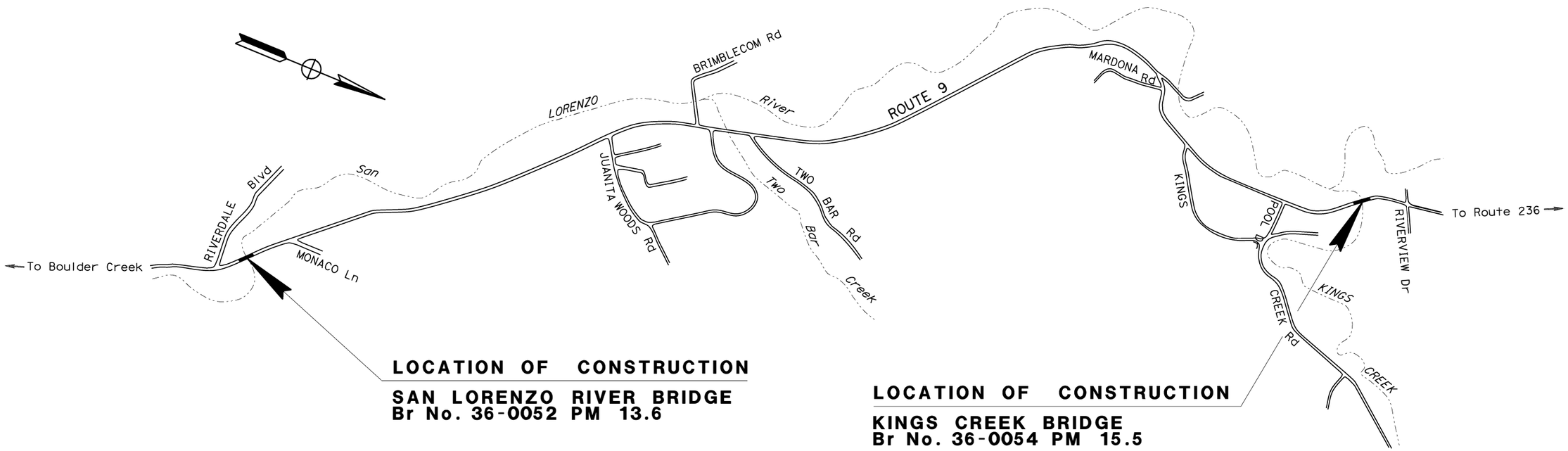

LOCATION OF CONSTRUCTION

SAN LORENZO RIVER BRIDGE
Br No. 36-0052 PM 13.6

LOCATION OF CONSTRUCTION

KINGS CREEK BRIDGE
Br No. 36-0054 PM 15.5

NO SCALE

PROJECT ENGINEER DATE
REGISTERED CIVIL ENGINEER

PLANS APPROVAL DATE

THE STATE OF CALIFORNIA OR ITS OFFICERS OR AGENTS SHALL NOT BE RESPONSIBLE FOR THE ACCURACY OR COMPLETENESS OF SCANNED COPIES OF THIS PLAN SHEET.

REGISTERED PROFESSIONAL ENGINEER
No.
Exp.
CIVIL
STATE OF CALIFORNIA

THE CONTRACTOR SHALL POSSESS THE CLASS (OR CLASSES) OF LICENSE AS SPECIFIED IN THE "NOTICE TO BIDDERS."

CONTRACT No.	**05-1H470**
PROJECT ID	**0516000078**

PROJECT MANAGER: DOUGLAS HESSING
DESIGN MANAGER: ARTHUR RAMIREZ

LAST REVISION | DATE PLOTTED

RELATIVE BORDER SCALE 0 1 2 3 | USERNAME => S118496

DocuSign Envelope ID: EF8475C0-0470-4E52-B5B5-25D92AE11799

Dist	COUNTY	ROUTE	POST MILES TOTAL PROJECT	SHEET No.	TOTAL SHEETS
05	SCr	9	13.6/15.5		

REGISTERED CIVIL ENGINEER DATE

PLANS APPROVAL DATE

REGISTERED PROFESSIONAL ENGINEER No. Exp. CIVIL STATE OF CALIFORNIA

THE STATE OF CALIFORNIA OR ITS OFFICERS OR AGENTS SHALL NOT BE RESPONSIBLE FOR THE ACCURACY OR COMPLETENESS OF SCANNED COPIES OF THIS PLAN SHEET.

NOTES:

1. DIMENSIONS OF THE PAVEMENT STRUCTURES (STRUCTURAL SECTIONS) ARE SUBJECT TO TOLERANCES SPECIFIED IN THE STANDARD SPECIFICATIONS.

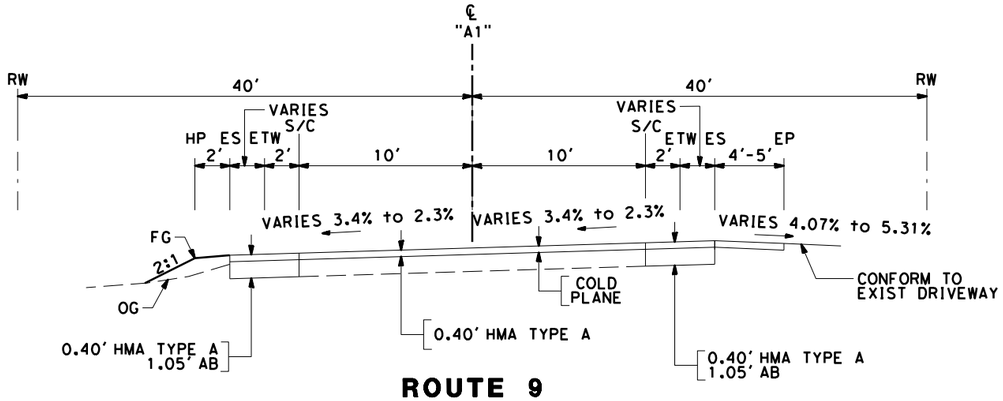

ROUTE 9
Sta 28+88.00 TO 29+08.00

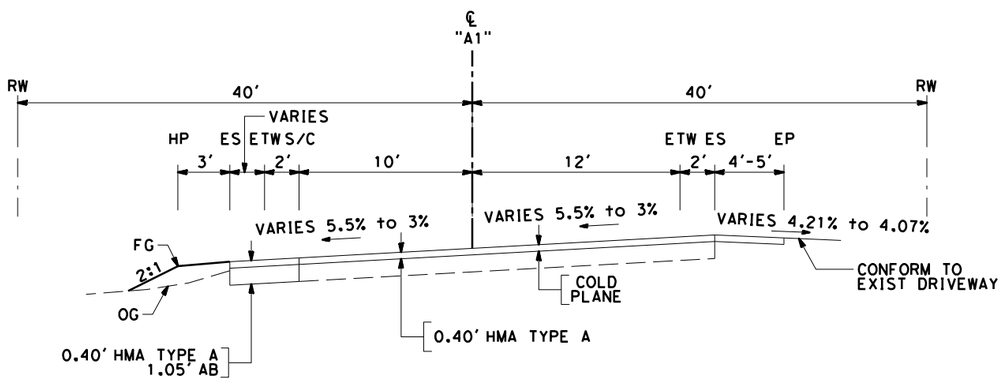

ROUTE 9
***Sta 28+51.00 TO 28+88.00**

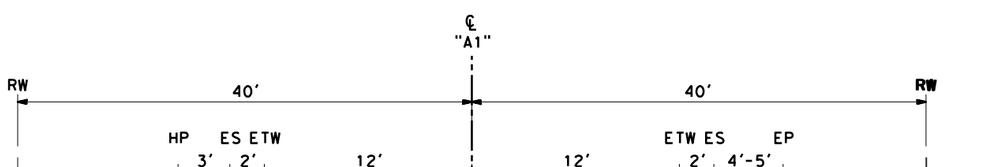

ROUTE 9
Sta 28+00.00 TO 28+51.00

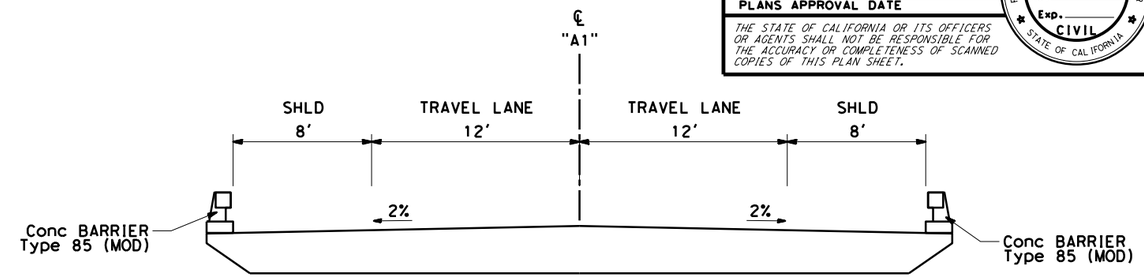

ROUTE 9
Sta 29+93.75 TO 31+00.00

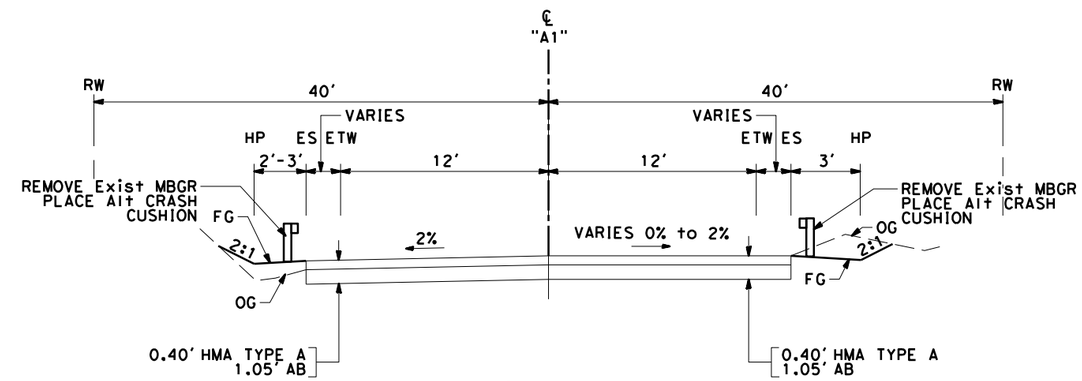

ROUTE 9
Sta 29+45.00 TO 29+93.75

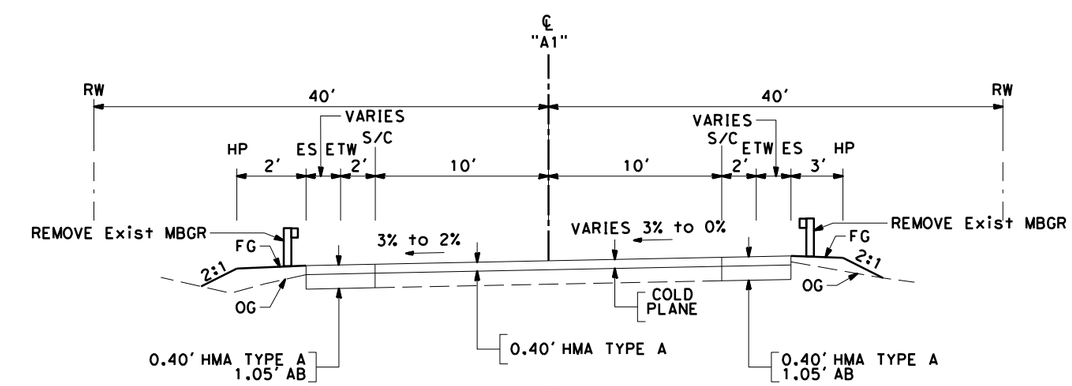

ROUTE 9
Sta 29+08.00 TO 29+45.00

TYPICAL CROSS SECTIONS

SAN LORENZO RIVER BRIDGE

X-1

NO SCALE

STATE OF CALIFORNIA - DEPARTMENT OF TRANSPORTATION
DESIGN

FUNCTIONAL SUPERVISOR | CALCULATED-DESIGNED BY | CHECKED BY | REVISED BY | DATE REVISED

LAST REVISION 11-30-21 | DATE PLOTTED => 12/6/2021 | TIME PLOTTED => 9:50:32 AM

DocuSign Envelope ID: EF8475C0-0470-4E52-B5B5-25D92AE11799

Dist	COUNTY	ROUTE	POST MILES TOTAL PROJECT	SHEET No.	TOTAL SHEETS
05	SCr	9	13.6/15.5		

REGISTERED CIVIL ENGINEER DATE

PLANS APPROVAL DATE

REGISTERED PROFESSIONAL ENGINEER No. Exp. CIVIL STATE OF CALIFORNIA

THE STATE OF CALIFORNIA OR ITS OFFICERS OR AGENTS SHALL NOT BE RESPONSIBLE FOR THE ACCURACY OR COMPLETENESS OF SCANNED COPIES OF THIS PLAN SHEET.

NOTES:

1. DIMENSIONS OF THE PAVEMENT STRUCTURES (STRUCTURAL SECTIONS) ARE SUBJECT TO TOLERANCES SPECIFIED IN THE STANDARD SPECIFICATIONS.

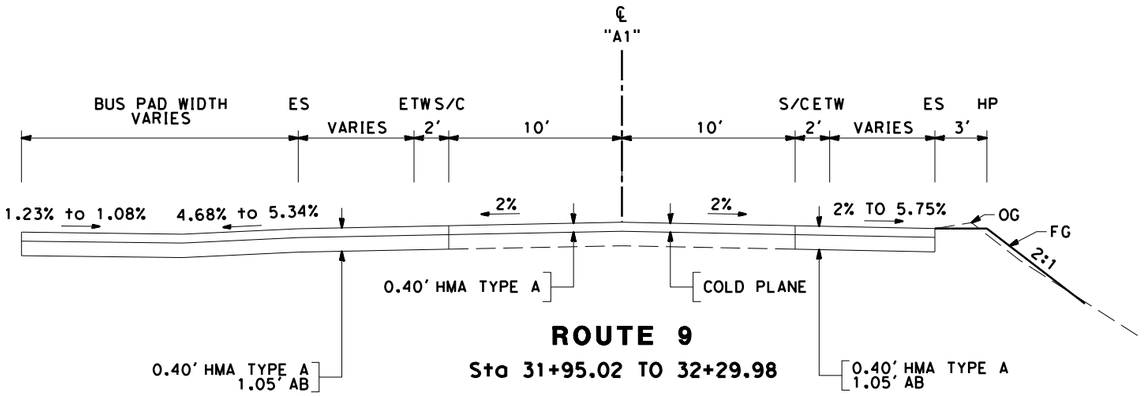

ROUTE 9
Sta 31+95.02 TO 32+29.98

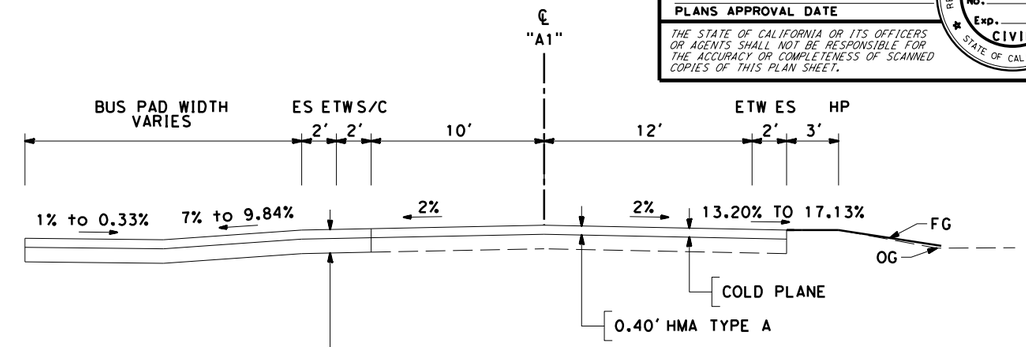

ROUTE 9
Sta 33+00.00 TO 33+28.76

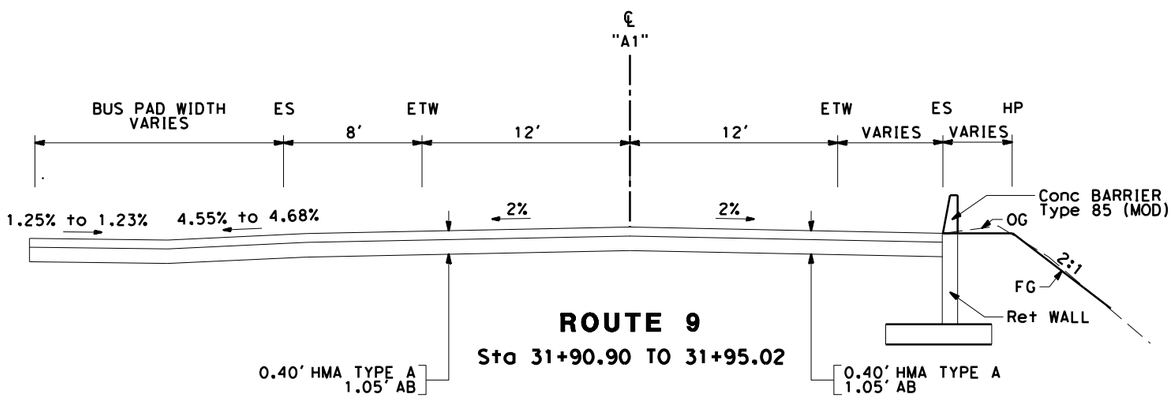

ROUTE 9
Sta 31+90.90 TO 31+95.02

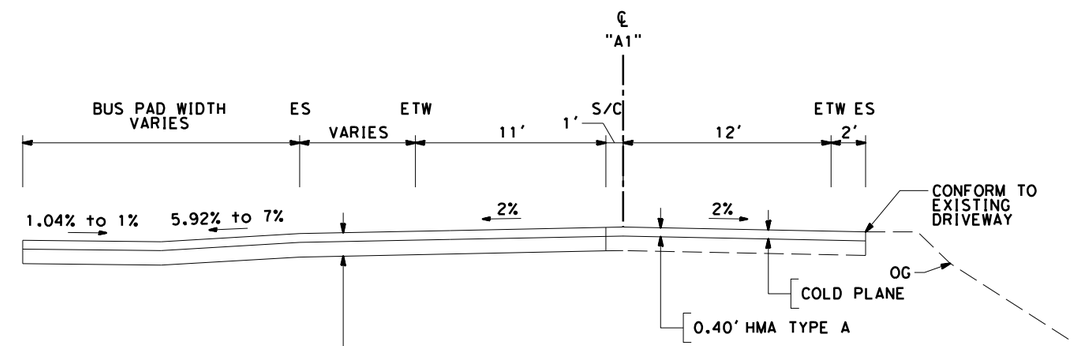

ROUTE 9
Sta 32+42.00 TO 33+00.00

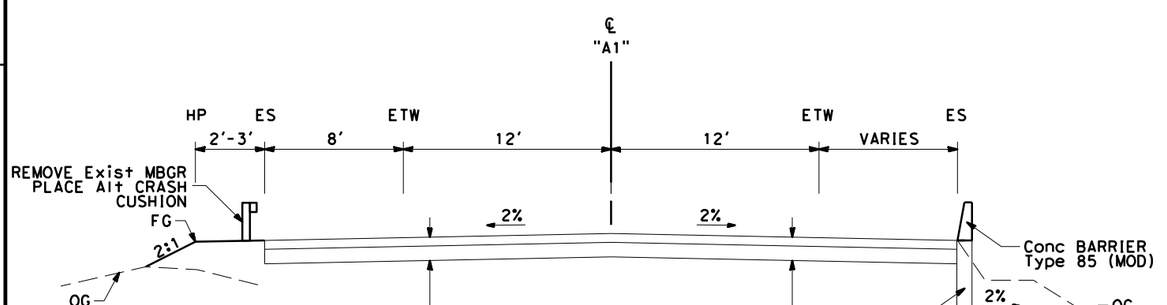

ROUTE 9
Sta 31+00.00 TO 31+90.90

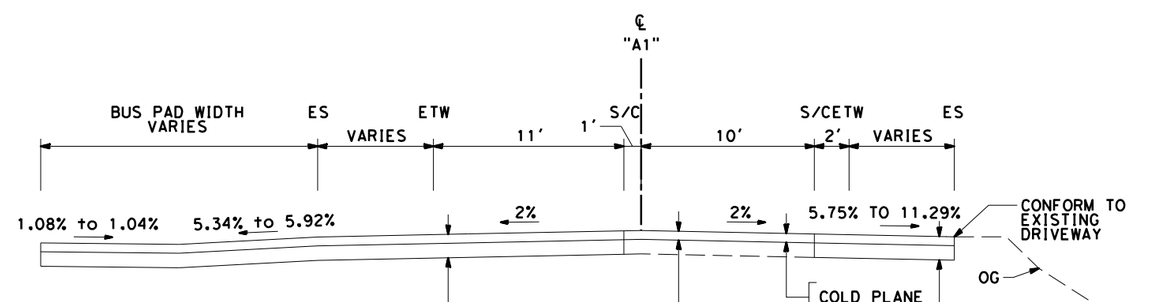

ROUTE 9
Sta 32+29.98 TO 32+42.00

TYPICAL CROSS SECTIONS

SAN LORENZO RIVER BRIDGE

X-2

NO SCALE

REVISED BY | DATE REVISED
CALCULATED-DESIGNED BY | CHECKED BY
FUNCTIONAL SUPERVISOR
STATE OF CALIFORNIA - DEPARTMENT OF TRANSPORTATION
DESIGN

LAST REVISION 11-30-21
DATE PLOTTED => 12/3/2021
TIME PLOTTED => 3:10:36 PM

DocuSign Envelope ID: EF8475C0-0470-4E52-B5B5-25D92AE11799

Dist	COUNTY	ROUTE	POST MILES TOTAL PROJECT	SHEET No.	TOTAL SHEETS
05	SCr	9	13.6/15.5		

REGISTERED CIVIL ENGINEER DATE

PLANS APPROVAL DATE

REGISTERED PROFESSIONAL ENGINEER No. Exp. CIVIL STATE OF CALIFORNIA

THE STATE OF CALIFORNIA OR ITS OFFICERS OR AGENTS SHALL NOT BE RESPONSIBLE FOR THE ACCURACY OR COMPLETENESS OF SCANNED COPIES OF THIS PLAN SHEET.

NOTES:

1. DIMENSIONS OF THE PAVEMENT STRUCTURES (STRUCTURAL SECTIONS) ARE SUBJECT TO TOLERANCES SPECIFIED IN THE STANDARD SPECIFICATIONS.
2. FOR APPROACH SLAB DETAILS, SEE STRUCTURAL PLANS.

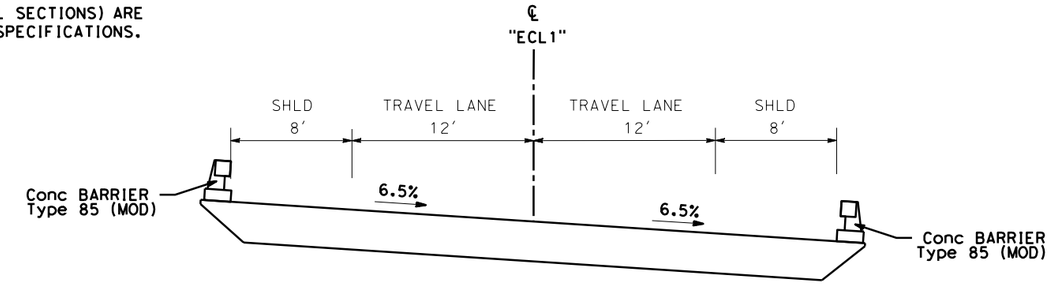

KINGS CREEK BRIDGE (# 36-0054)
ROUTE 9
Sta 129+64.50 TO 130+63.50

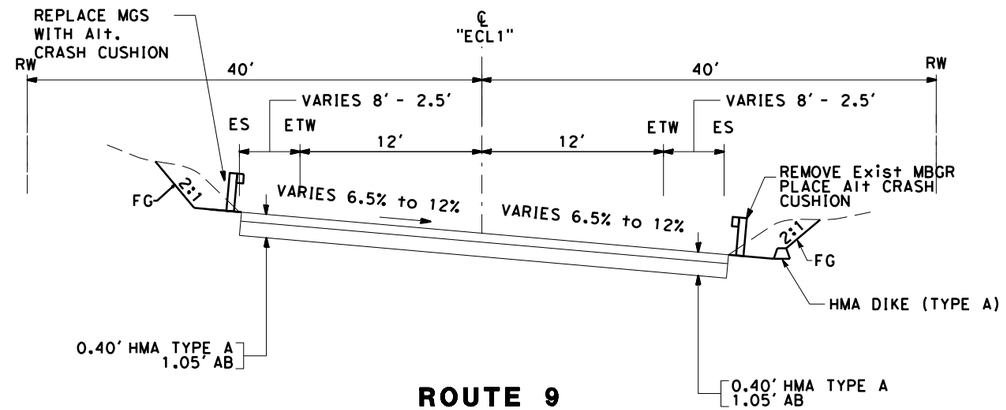

ROUTE 9
Sta 130+63.50 TO 132+19.00

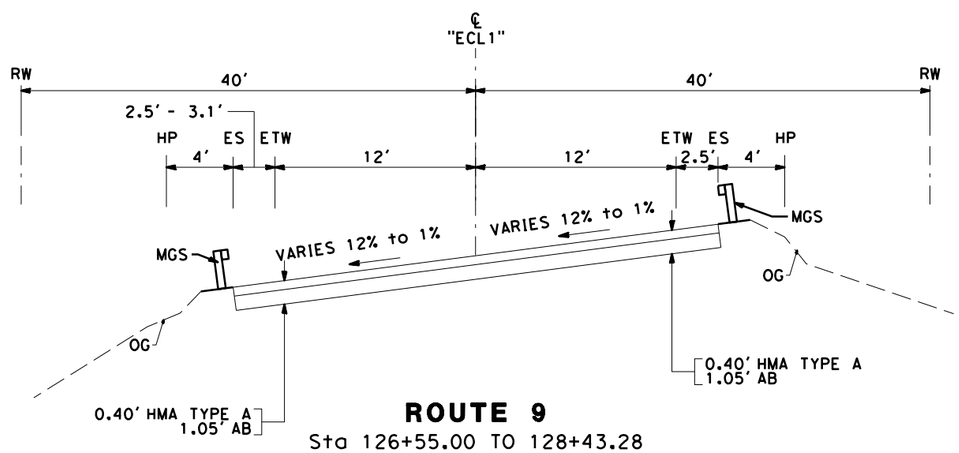

ROUTE 9
Sta 126+55.00 TO 128+43.28

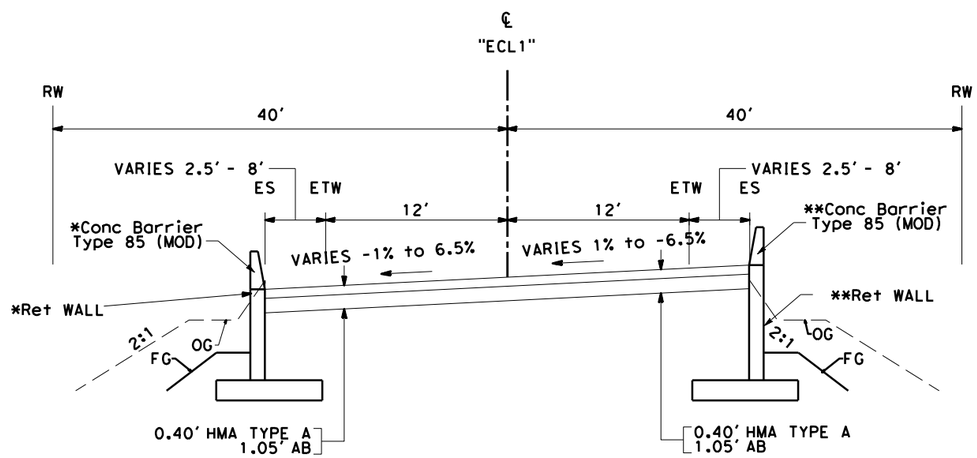

ROUTE 9
*Sta 128+43.28 TO 129+64.50
**Sta 128+70.00 TO 129+64.50

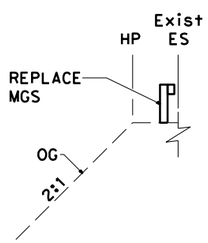

ROUTE 9
Sta 126+20.11 TO 126+55.00

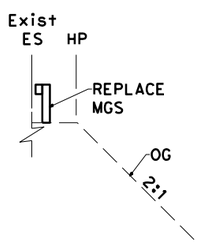

ROUTE 9
Sta 125+22.20 TO 126+55.00

KINGS CREEK BRIDGE

TYPICAL CROSS SECTIONS
NO SCALE

X-3

STATE OF CALIFORNIA - DEPARTMENT OF TRANSPORTATION
DESIGN
FUNCTIONAL SUPERVISOR: ARTHUR RAMIREZ
CALCULATED-DESIGNED BY | CHECKED BY
REVISED BY | DATE REVISED

LAST REVISION 08-10-20 | DATE PLOTTED => 12/6/2021 | TIME PLOTTED => 10:48:46 AM

DocuSign Envelope ID: EF8475C0-0470-4E52-B5B5-25D92AE11799

Dist	COUNTY	ROUTE	POST MILES TOTAL PROJECT	SHEET No.	TOTAL SHEETS
05	SCr	9	13.6/15.5		XX

REGISTERED CIVIL ENGINEER DATE

PLANS APPROVAL DATE

REGISTERED PROFESSIONAL ENGINEER No. Exp. CIVIL STATE OF CALIFORNIA

THE STATE OF CALIFORNIA OR ITS OFFICERS OR AGENTS SHALL NOT BE RESPONSIBLE FOR THE ACCURACY OR COMPLETENESS OF SCANNED COPIES OF THIS PLAN SHEET.

NOTE:

1. FOR ACCURATE RIGHT OF WAY DATA, CONTACT RIGHT OF WAY ENGINEERING AT THE DISTRICT OFFICE.
2. ENCROACHING OBJECTS ARE TO BE REMOVED BY OTHERS.
3. ON L-1, AREA AROUND BUS SHELTER BETWEEN RESIDENTIAL FENCE AND BUS PAD WILL BE COLD PLANED AND PAVED WITH HMA. BUS PAD WILL HAVE THE SAME STRUCTURAL SECTION AS THE TRAVELWAY
4. REFER TO LANDSCAPE PLANS FOR WETLAND EXCAVATION AND BACKFILL LIMITS

CURVE DATA

No. ⊕	R	Δ	T	L
1	400'	34°08'32"	122.83'	238.36'

ENCROACHING OBJECTS

□	DESCRIPTION	LOCATION - "A1" LINE
a	FENCE	Sta 31+13.22 TO 31+89.30
b	FENCE	Sta 32+15.21 TO 32+60.51

LEGEND

FWALL: Front face of the retaining wall adjacent to the ES

BKWALL: The LOL line and back face of the retaining wall

PAVED TRANSITION TO BUS PAD

PAVED BUS PAD

THVF TEMPORARY HIGH VISIBILITY FENCE

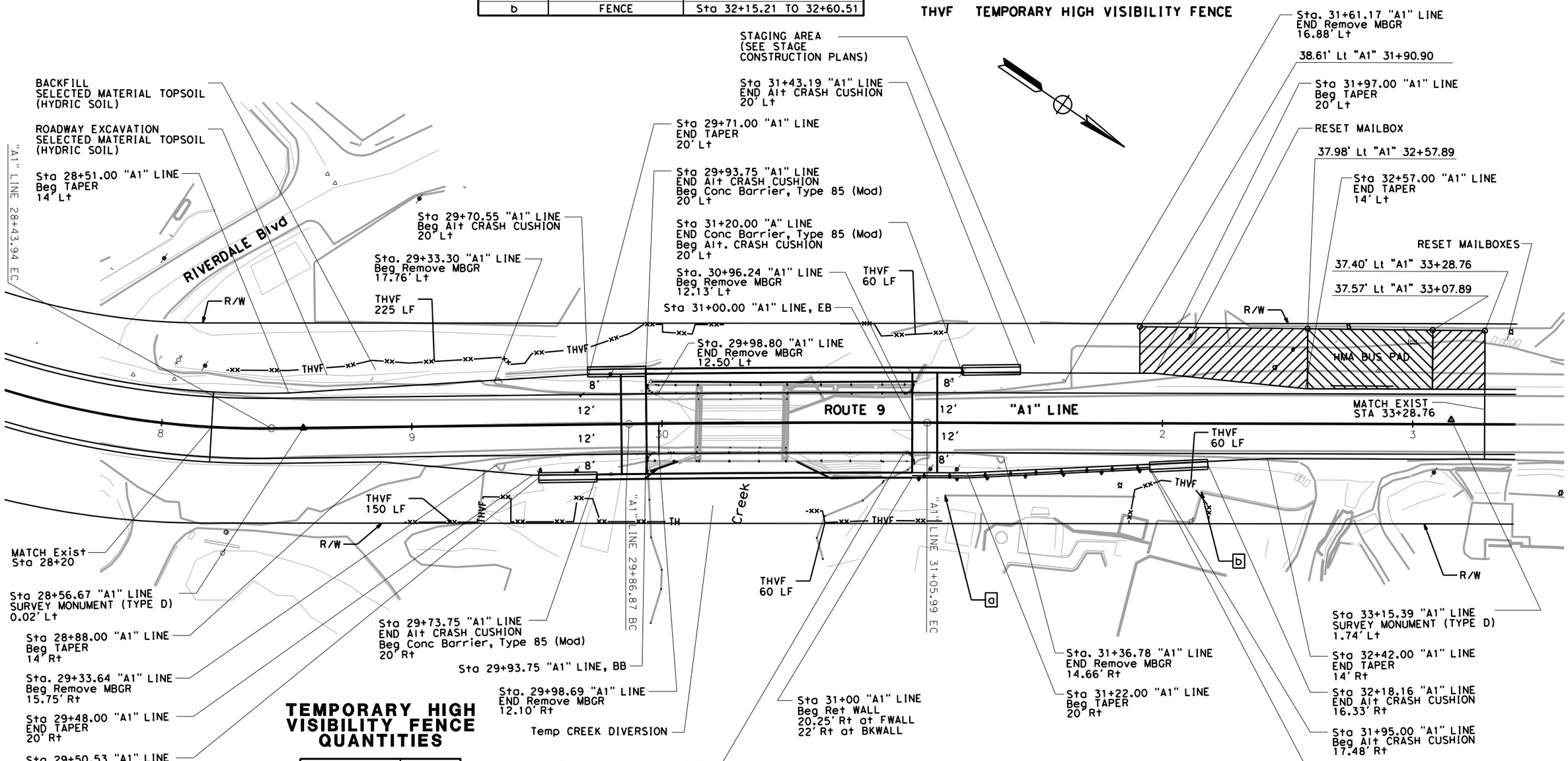

TEMPORARY HIGH VISIBILITY FENCE QUANTITIES

SHEET No.	THVF
	LF
L-1	555
L-2	600
L-3	465
TOTAL	1,620

SAN LORENZO RIVER BRIDGE
PM 13.6

SCALE: 1"=20'

LAYOUT
L-1

REVISED BY | DATE REVISED

CALCULATED-DESIGNED BY | CHECKED BY

FUNCTIONAL SUPERVISOR: ARTHUR RAMIREZ

STATE OF CALIFORNIA - DEPARTMENT OF TRANSPORTATION

DESIGN

LAST REVISION 05-12-21

DATE PLOTTED => 12/6/2021
TIME PLOTTED => 11:49:57 AM

DocuSign Envelope ID: EF8475C0-0470-4E52-B5B5-25D92AE11799

Dist	COUNTY	ROUTE	POST MILES TOTAL PROJECT	SHEET No.	TOTAL SHEETS
05	SCr	9	13.6/15.5		XX

REGISTERED CIVIL ENGINEER DATE

PLANS APPROVAL DATE

REGISTERED PROFESSIONAL ENGINEER No. Exp. CIVIL STATE OF CALIFORNIA

THE STATE OF CALIFORNIA OR ITS OFFICERS OR AGENTS SHALL NOT BE RESPONSIBLE FOR THE ACCURACY OR COMPLETENESS OF SCANNED COPIES OF THIS PLAN SHEET.

NOTE:

FOR ACCURATE RIGHT OF WAY DATA, CONTACT RIGHT OF WAY ENGINEERING AT THE DISTRICT OFFICE.

ENCROACHING OBJECTS

☐	DESCRIPTION	LOCATION - "ECL1" LINE
C	FENCE	Sta 127+81.48 TO 128+35.03

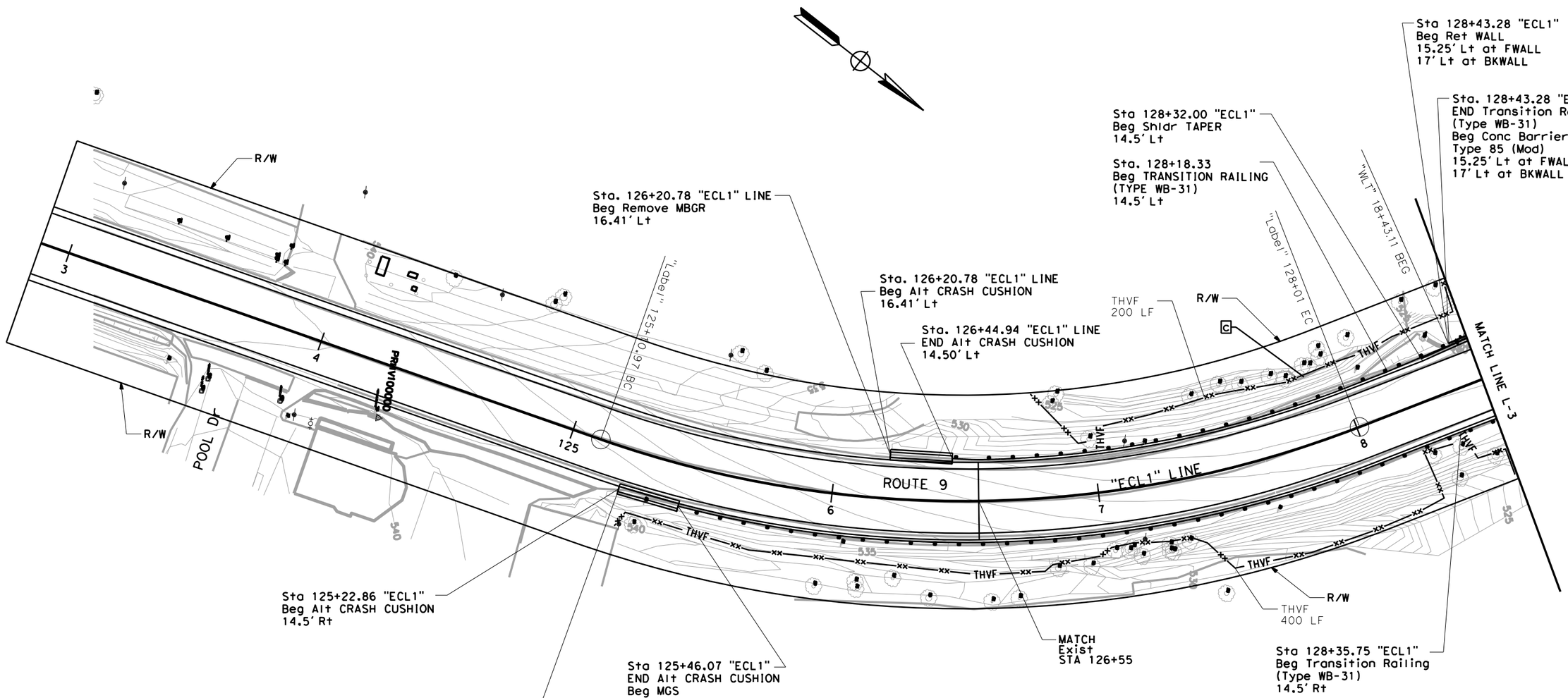

KINGS CREEK BRIDGE
Br No. 36-0054 PM 15.5

LAYOUT L-2

SCALE: 1"=20'

STATE OF CALIFORNIA - DEPARTMENT OF TRANSPORTATION

Caltrans

DESIGN

FUNCTIONAL SUPERVISOR: ARTHUR RAMIREZ

CALCULATED-DESIGNED BY

CHECKED BY

REVISED BY

DATE REVISED

LAST REVISION 05-12-21

DATE PLOTTED => 12/6/2021
TIME PLOTTED => 11:48:41 AM

BORDER LAST REVISED 7/2/2010

USERNAME =>
DGN FILE => ...\Layouts\0516000078ea002.dgn

RELATIVE BORDER SCALE IS IN INCHES 0 1 2 3

UNIT 1459

PROJECT NUMBER & PHASE 05160000781

DocuSign Envelope ID: EF8475C0-0470-4E52-B5B5-25D92AE11799

Dist	COUNTY	ROUTE	POST MILES TOTAL PROJECT	SHEET No.	TOTAL SHEETS
05	SCr	9	13.6/15.5		XX

REGISTERED CIVIL ENGINEER DATE

PLANS APPROVAL DATE

REGISTERED PROFESSIONAL ENGINEER No. Exp. CIVIL STATE OF CALIFORNIA

THE STATE OF CALIFORNIA OR ITS OFFICERS OR AGENTS SHALL NOT BE RESPONSIBLE FOR THE ACCURACY OR COMPLETENESS OF SCANNED COPIES OF THIS PLAN SHEET.

NOTE:

FOR ACCURATE RIGHT OF WAY DATA, CONTACT RIGHT OF WAY ENGINEERING AT THE DISTRICT OFFICE.

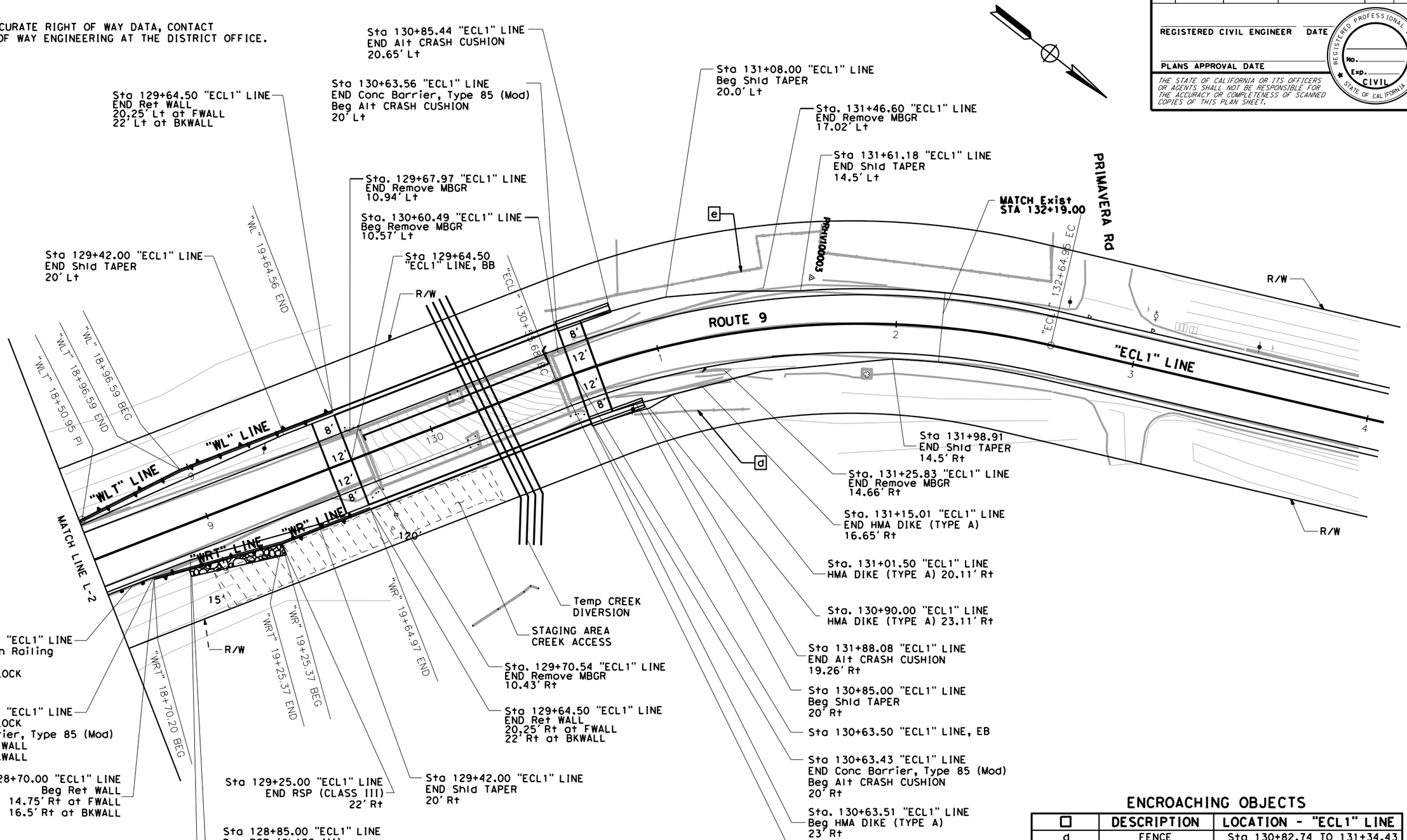

ENCROACHING OBJECTS

☐	DESCRIPTION	LOCATION - "ECL1" LINE
d	FENCE	Sta 130+82.74 TO 131+34.43
e	FENCE	Sta 130+60.89 TO 132+59.81

KINGS CREEK BRIDGE
Br No. 36-0054 PM 15.5

LAYOUT
L-3

SCALE: 1"=20'

STATE OF CALIFORNIA - DEPARTMENT OF TRANSPORTATION

DESIGN

FUNCTIONAL SUPERVISOR: ARTHUR RAMIREZ

CALCULATED-DESIGNED BY | CHECKED BY | REVISED BY | DATE REVISED

LAST REVISION 12-01-21 | DATE PLOTTED => 12/6/2021 | TIME PLOTTED => 3:45:57 PM

DocuSign Envelope ID: EF8475C0-0470-4E52-B5B5-25D92AE11799

Dist	COUNTY	ROUTE	POST MILES TOTAL PROJECT	SHEET No.	TOTAL SHEETS
05	SCr	9	13.6/15.5		

REGISTERED CIVIL ENGINEER DATE

PLANS APPROVAL DATE

REGISTERED PROFESSIONAL ENGINEER No. Exp. CIVIL STATE OF CALIFORNIA

THE STATE OF CALIFORNIA OR ITS OFFICERS OR AGENTS SHALL NOT BE RESPONSIBLE FOR THE ACCURACY OR COMPLETENESS OF SCANNED COPIES OF THIS PLAN SHEET.

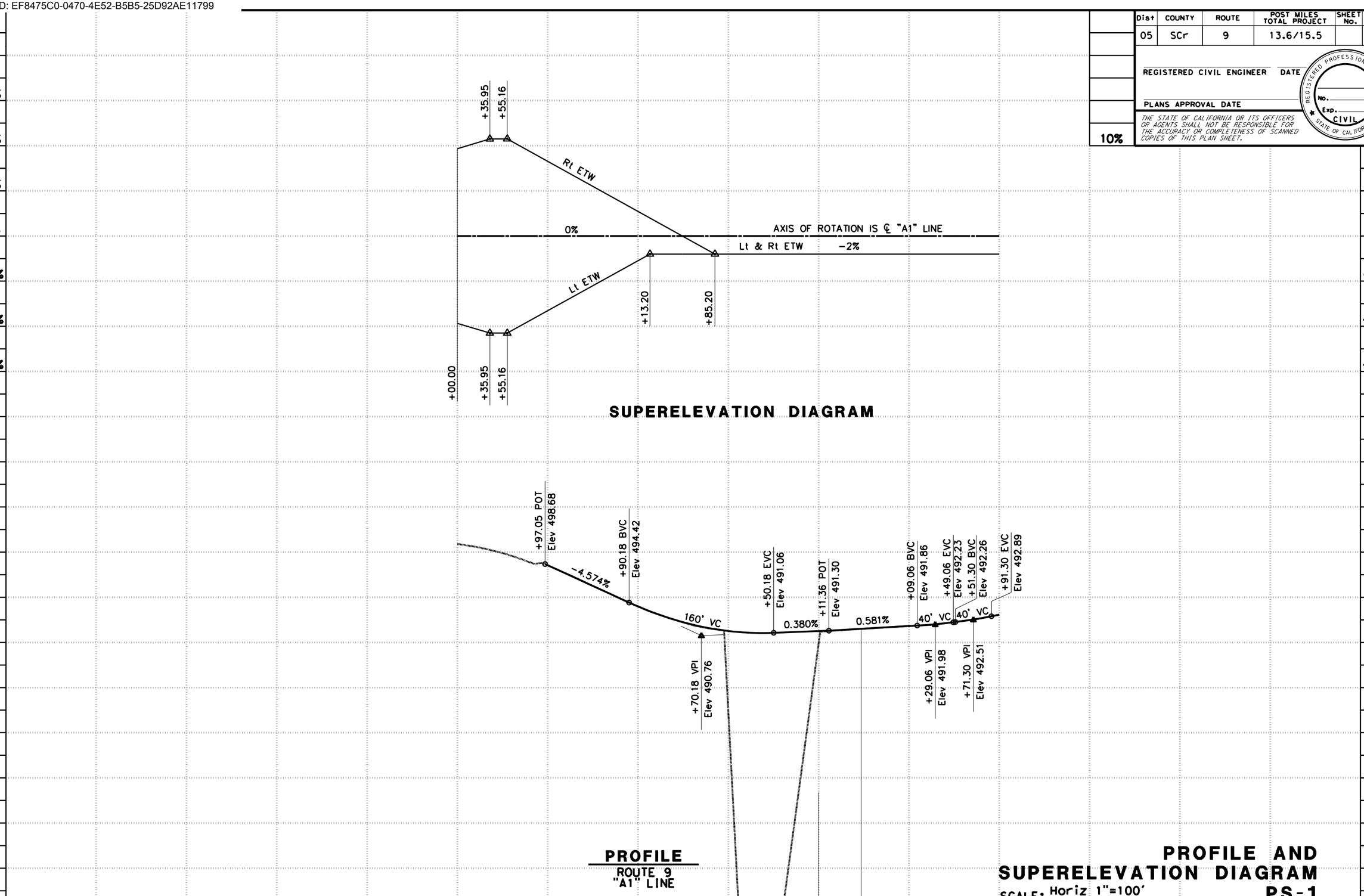

PROFILE AND SUPERELEVATION DIAGRAM

SCALE: Horiz 1"=100'
Vert 1"=5'

PS-1

STATE OF CALIFORNIA - DEPARTMENT OF TRANSPORTATION

Caltrans 06-DESIGN

FUNCTIONAL SUPERVISOR: ARTHUR RAMIREZ

CALCULATED-DESIGNED BY: JOHNNY REYES

CHECKED BY

REVISED BY

DATE REVISED

LAST REVISION 05-13-21

DATE PLOTTED => 12/7/2021
TIME PLOTTED => 8:46:14 AM

DocuSign Envelope ID: EF8475C0-0470-4E52-B5B5-25D92AE11799

Dist	COUNTY	ROUTE	POST MILES TOTAL PROJECT	SHEET No.	TOTAL SHEETS
05	SCr	9	13.6/15.5		

REGISTERED CIVIL ENGINEER DATE

PLANS APPROVAL DATE

REGISTERED PROFESSIONAL ENGINEER No. Exp. CIVIL STATE OF CALIFORNIA

THE STATE OF CALIFORNIA OR ITS OFFICERS OR AGENTS SHALL NOT BE RESPONSIBLE FOR THE ACCURACY OR COMPLETENESS OF SCANNED COPIES OF THIS PLAN SHEET.

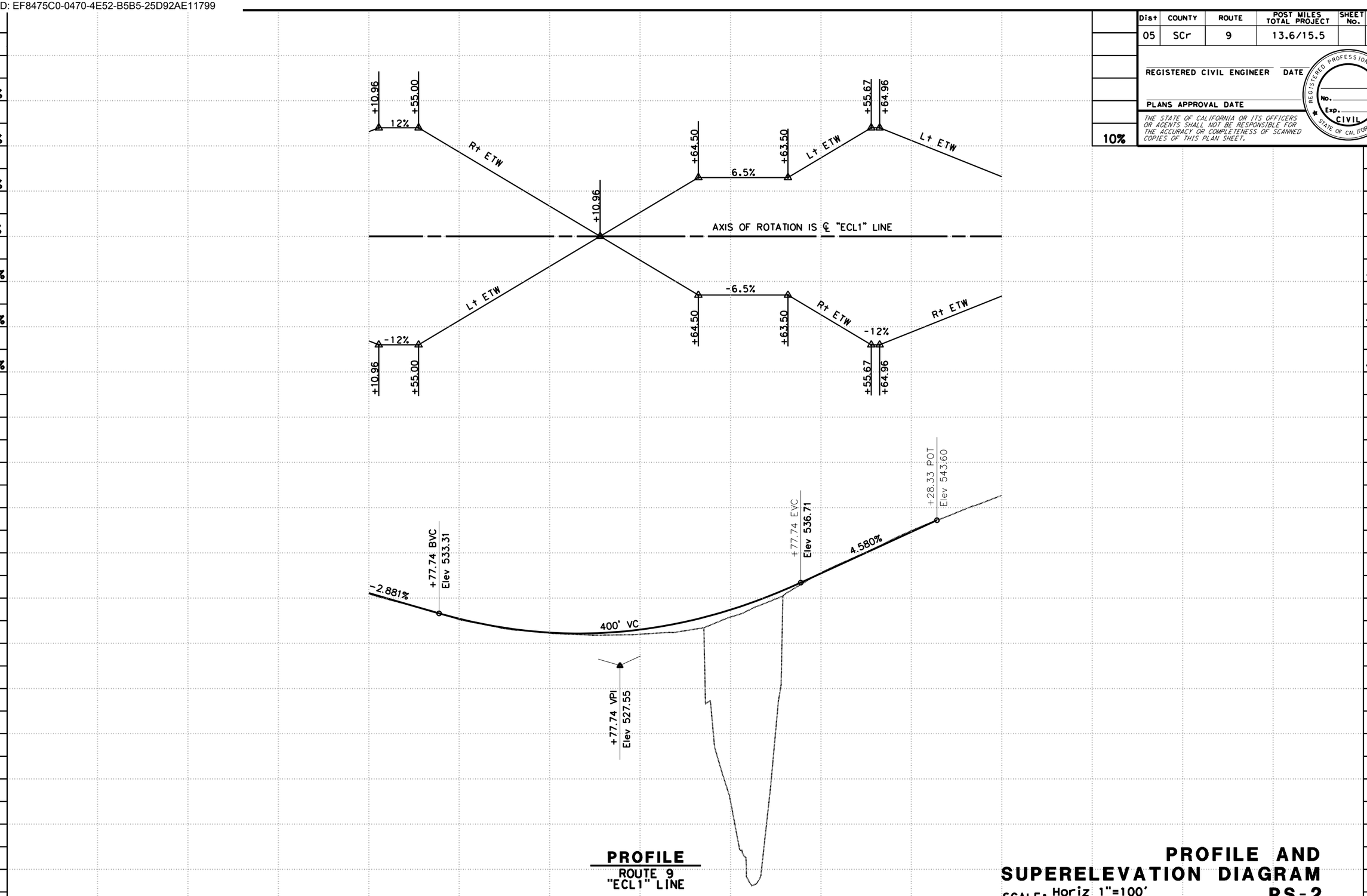

PROFILE
ROUTE 9
"ECL1" LINE

PROFILE AND SUPERELEVATION DIAGRAM

SCALE: Horiz 1"=100'
Vert 1"=5'

PS-2

STATE OF CALIFORNIA - DEPARTMENT OF TRANSPORTATION
06-DESIGN
Caltrans

FUNCTIONAL SUPERVISOR: ARTHUR RAMIREZ

CALCULATED-DESIGNED BY: JOHNNY REYES
CHECKED BY

REVISED BY
DATE REVISED

LAST REVISION 05-14-21
DATE PLOTTED => 12/7/2021
TIME PLOTTED => 8:51:15 AM

DocuSign Envelope ID: EF8475C0-0470-4E52-B5B5-25D92AE11799

Dist	COUNTY	ROUTE	POST MILES TOTAL PROJECT	SHEET No.	TOTAL SHEETS
05	SCr	9	13.6/15.5	??	???

REGISTERED CIVIL ENGINEER 00/00/00 DATE

PLANS APPROVAL DATE XX-XX-XX

REGISTERED PROFESSIONAL ENGINEER No. Exp. CIVIL STATE OF CALIFORNIA

THE STATE OF CALIFORNIA OR ITS OFFICERS OR AGENTS SHALL NOT BE RESPONSIBLE FOR THE ACCURACY OR COMPLETENESS OF SCANNED COPIES OF THIS PLAN SHEET.

LEGEND (THIS SHEET ONLY):

- COLD PLANE AC PAVEMENT

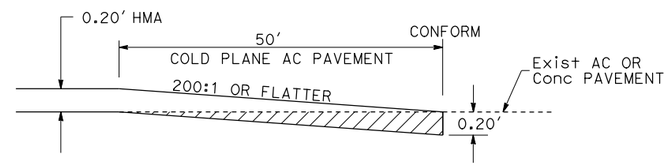

CONFORM TAPER
AT BEGIN/END CONSTRUCTION

BRIDGE TABLE

PM	BRIDGE NAME	BRIDGE No.
13.6	SAN LORENZO BRIDGE	42-0036

CONSTRUCTION DETAILS

NO SCALE **C-1**

REVISED BY | DATE REVISED

HARJINDER CHHINA | JOHNNY REYES

CALCULATED-DESIGNED BY | CHECKED BY

FUNCTIONAL SUPERVISOR: ARTHER RAMIREZ

STATE OF CALIFORNIA - DEPARTMENT OF TRANSPORTATION

Caltrans® DESIGN

LAST REVISION 11-24-21 | DATE PLOTTED => 4-DEC-2021 | TIME PLOTTED => 14:12

DocuSign Envelope ID: EF8475C0-0470-4E52-B5B5-25D92AE11799

Dist	COUNTY	ROUTE	POST MILES TOTAL PROJECT	SHEET No.	TOTAL SHEETS
05	SCr	9	13.6/15.5	??	???

REGISTERED CIVIL ENGINEER 00/00/00 DATE

XX-XX-XX
PLANS APPROVAL DATE

REGISTERED PROFESSIONAL ENGINEER No. Exp. CIVIL STATE OF CALIFORNIA

THE STATE OF CALIFORNIA OR ITS OFFICERS OR AGENTS SHALL NOT BE RESPONSIBLE FOR THE ACCURACY OR COMPLETENESS OF SCANNED COPIES OF THIS PLAN SHEET.

LEGEND (THIS SHEET ONLY):

- COLD PLANE AC PAVEMENT RHMA-G
- COLD PLANE AC PAVEMENT HMA (TYPE A)
- HMA (TYPE A)

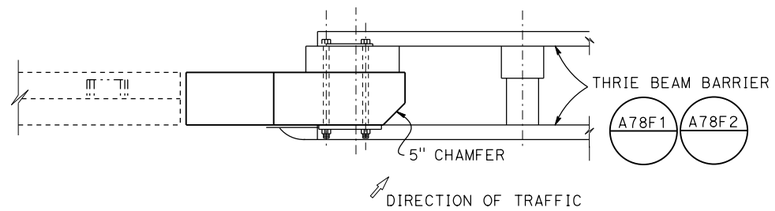

PLAN

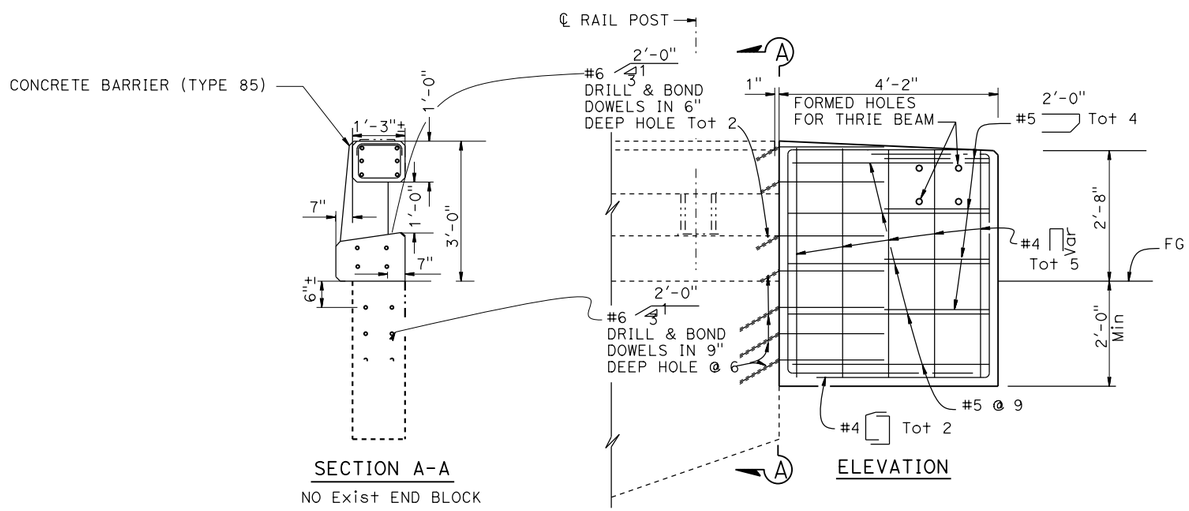

SECTION A-A
NO Exist END BLOCK

ELEVATION

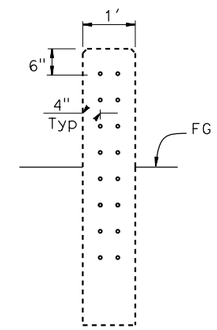

SECTION A-A
CONCRETE BARRIER (TYPE 85)

Conc BARRIER TRANSITION

KINGS CREEK PM 13.6

CONSTRUCTION DETAILS

NO SCALE **C-2**

REVISED BY	DATE REVISED
HARJINDER CHHINA	JOHNNY REYES
CALCULATED-DESIGNED BY	CHECKED BY
FUNCTIONAL SUPERVISOR	ARTHER RAMIREZ

STATE OF CALIFORNIA - DEPARTMENT OF TRANSPORTATION
Caltrans® DESIGN

LAST REVISION 11-24-21 | DATE PLOTTED => 7-DEC-2021 TIME PLOTTED => 07:31

DocuSign Envelope ID: EF8475C0-0470-4E52-B5B5-25D92AE11799

Dist	COUNTY	ROUTE	POST MILES TOTAL PROJECT	SHEET No.	TOTAL SHEETS
05	SCr	9	13.6/15.5	??	???

REGISTERED CIVIL ENGINEER 00-00-00 DATE

PLANS APPROVAL DATE XX-XX-XX

REGISTERED PROFESSIONAL ENGINEER No. Exp. CIVIL STATE OF CALIFORNIA

THE STATE OF CALIFORNIA OR ITS OFFICERS OR AGENTS SHALL NOT BE RESPONSIBLE FOR THE ACCURACY OR COMPLETENESS OF SCANNED COPIES OF THIS PLAN SHEET.

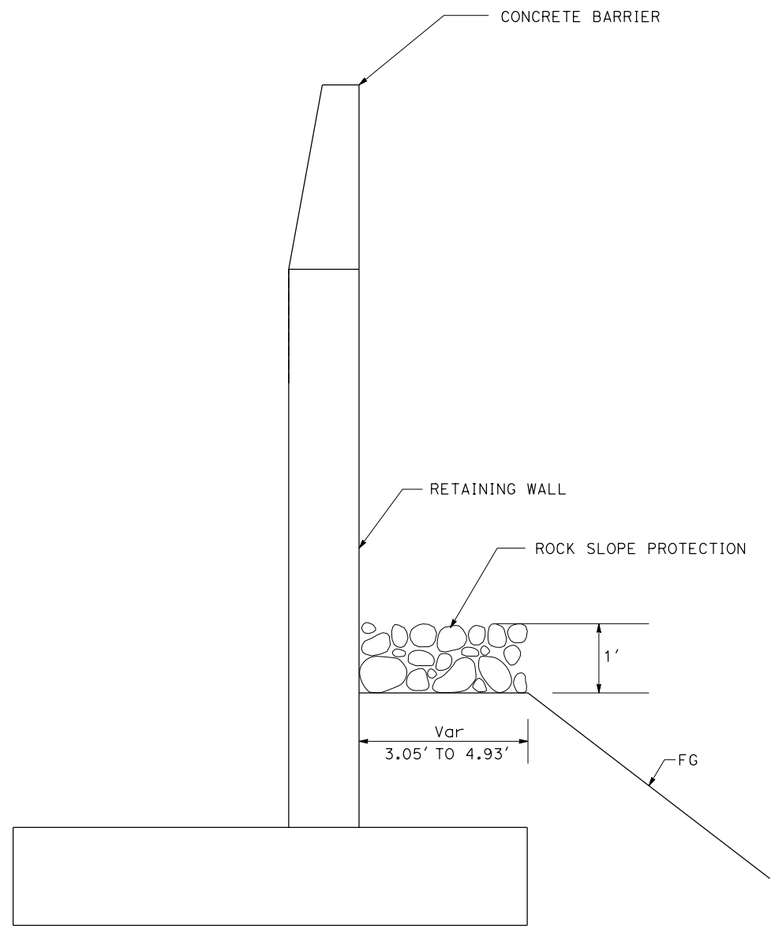

ROCK SLOPE PROTECTION

Sta 128+85 TO Sta 129+25 "ECL1" LINE

APPROVED FOR DRAINAGE WORK ONLY

NO SCALE

DRAINAGE DETAILS
DD-1

REVISED BY	DATE REVISED

CALCULATED-DESIGNED BY	HARJINDER CHHINA
CHECKED BY	JOHNNY REYES
FUNCTIONAL SUPERVISOR	ARTHUR RAMIREZ

STATE OF CALIFORNIA - DEPARTMENT OF TRANSPORTATION

Caltrans® 06-DESIGN

LAST REVISION 12-06-21 | DATE PLOTTED => 7-DEC-2021 TIME PLOTTED => 11:38

DocuSign Envelope ID: EF8475C0-0470-4E52-B5B5-25D92AE11799

Dist	COUNTY	ROUTE	POST MILES TOTAL PROJECT	SHEET No.	TOTAL SHEETS
05	SCr	9	13.6/15.5		XX

REGISTERED CIVIL ENGINEER DATE

PLANS APPROVAL DATE

REGISTERED PROFESSIONAL ENGINEER No. Exp. CIVIL STATE OF CALIFORNIA

THE STATE OF CALIFORNIA OR ITS OFFICERS OR AGENTS SHALL NOT BE RESPONSIBLE FOR THE ACCURACY OR COMPLETENESS OF SCANNED COPIES OF THIS PLAN SHEET.

NOTE:

1. FOR ACCURATE RIGHT OF WAY DATA, CONTACT RIGHT OF WAY ENGINEERING AT THE DISTRICT OFFICE.
2. TEMPORARY CLEAR ZONE IS FOR BRIDGE ACCESS DURING CONSRTUCTION.
3. PERMANENT CLEAR ZONE IS 20' FROM ETW OR 4' OFFSET FROM GUARDRAIL AND RETAINING WALL

UTILITIES OWNERSHIP

- PG&E OVERHEAD ELECTRICAL
- COMCAST OH FIBER OPTIC CABLE
- AT&T OH TELEPHONE CABLE
- SAN LORENZO VALLEY WATER DISTRICT
- SAN LORENZO VALLEY WATER DISTRICT ABANDONED
- AT&T FIBER OPTIC CABLE
- POLE
- AT&T SUBBOX

LEGEND

- OH OVERHEAD
- UG UNDERGROUND
- (X) POSITIVE LOCATION NUMBER
- POSITIVE LOCATION

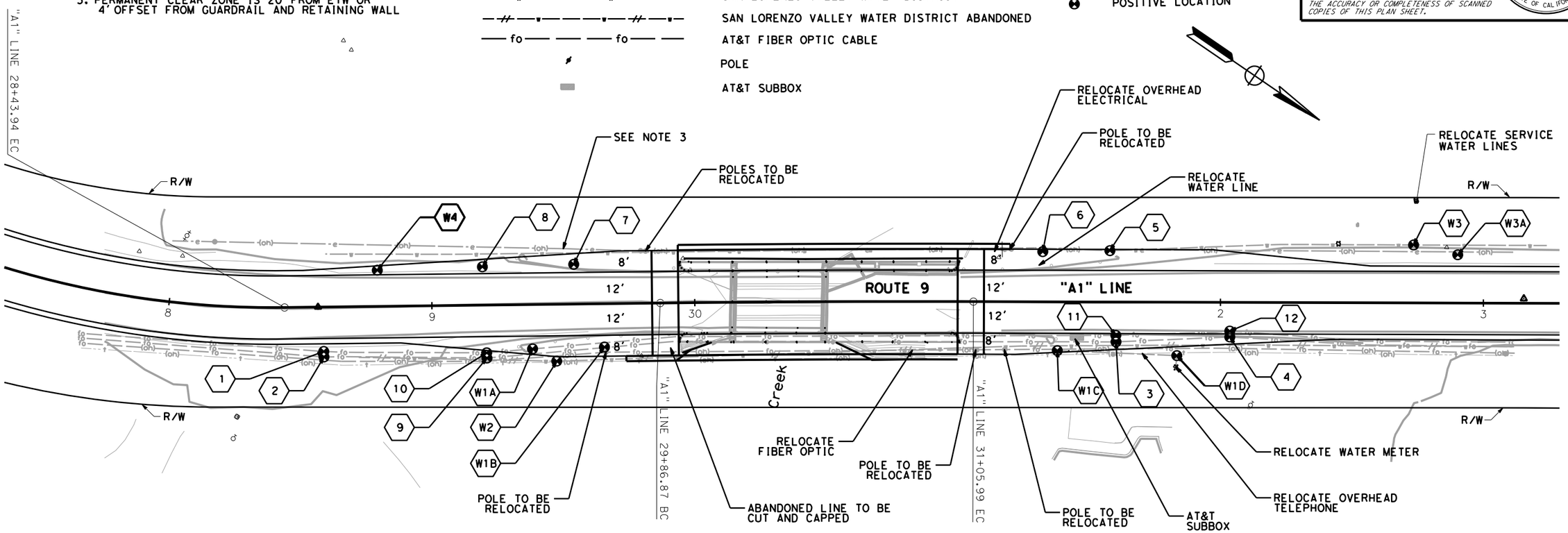

SAN LORENZO RIVER BRIDGE
PM 13.6

POSITIVE LOCATION INFORMATION

(X)	UTILITY OWNERSHIP	DESCRIPTION	LOCATION	UTILITY OR OTHER FOUND	DEPTH
1	AT&T	FIBER OPTIC CABLE	SR 9	NONE FOUND	5.00'
2	↑	↑	↑	(1) 6" CONDUIT, (1) 2" FIBER OPTIC	3.00'
3	↓	↓		APPROX. 3"CONDUIT	3.00'
4	AT&T	FIBER OPTIC CABLE		2"-3"CONDUIT	2.58'
5	SAN LORENZO VALLEY WATER DISTRICT	WATER		APPROX. 6" PIPE	4.50'
6	↑	↑		SLURRY	2.00'
7	↓	↓		SLURRY	0.75'
8	SAN LORENZO VALLEY WATER DISTRICT	WATER		SLURRY	0.67'
9	AT&T	FIBER OPTIC CABLE		2"-3" PIPE	3.25'
10	AT&T	↑		APPROX. 6" CONDUIT	2.92'
11	AT&T	↓		APPROX. 6" CONDUIT	3.25'
12	AT&T	FIBER OPTIC CABLE		APPROX. 6" CONDUIT	2.42'
W1A	SAN LORENZO VALLEY WATER DISTRICT	WATER		NONE FOUND	6.33'
W1B	SAN LORENZO VALLEY WATER DISTRICT	WATER		NONE FOUND	6.33'
W1C	SAN LORENZO VALLEY WATER DISTRICT	WATER		2" PIPE (POSSIBLY IRR.)	2.00'
W1D	SAN LORENZO VALLEY WATER DISTRICT	WATER		2" PIPE (POSSIBLY IRR.)	2.00'
W2	SAN LORENZO VALLEY WATER DISTRICT	WATER		APPROX. 6" PIPE	2.58'
W3	SAN LORENZO VALLEY WATER DISTRICT	WATER		APPROX. 12" PIPE	3.33'
W3A	SAN LORENZO VALLEY WATER DISTRICT	WATER	↓	NONE FOUND	7.17'
W4	SAN LORENZO VALLEY WATER DISTRICT	WATER	SR 9	SLURRY	0.50'

UTILITY PLAN
U-1

SCALE: 1"=20'

REVISED BY | DATE REVISED

CALCULATED-DESIGNED BY | CHECKED BY

FUNCTIONAL SUPERVISOR: ARTHUR RAMIREZ

STATE OF CALIFORNIA - DEPARTMENT OF TRANSPORTATION

Caltrans

DESIGN

LAST REVISION 10-11-20 | DATE PLOTTED => 12/7/2021 | TIME PLOTTED => 4:19:44 PM

DocuSign Envelope ID: EF8475C0-0470-4E52-B5B5-25D92AE11799

Dist	COUNTY	ROUTE	POST MILES TOTAL PROJECT	SHEET No.	TOTAL SHEETS
05	SCr	9	13.6/15.5		XX

REGISTERED CIVIL ENGINEER DATE

PLANS APPROVAL DATE

REGISTERED PROFESSIONAL ENGINEER No. Exp. CIVIL STATE OF CALIFORNIA

THE STATE OF CALIFORNIA OR ITS OFFICERS OR AGENTS SHALL NOT BE RESPONSIBLE FOR THE ACCURACY OR COMPLETENESS OF SCANNED COPIES OF THIS PLAN SHEET.

NOTE:

FOR ACCURATE RIGHT OF WAY DATA, CONTACT RIGHT OF WAY ENGINEERING AT THE DISTRICT OFFICE.

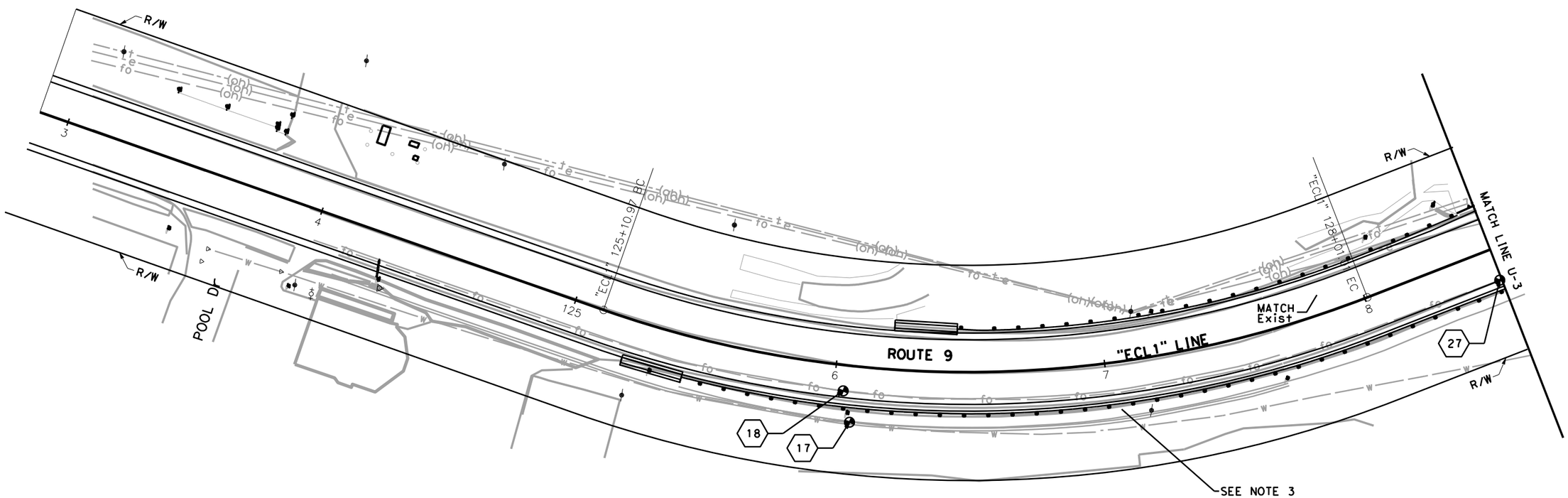

KINGS CREEK BRIDGE
Br No. 36-0054 PM 15.5

POSITIVE LOCATION INFORMATION

⟨X⟩	UTILITY OWNERSHIP	DESCRIPTION	LOCATION	UTILITY OR OTHER FOUND	DEPTH
17	SAN LORENZO VALLEY WATER DISTRICT	WATER	SR 9	NONE FOUND	7.00'
18	AT&T	FIBER OPTIC CABLE	SR 9	NONE FOUND	1.25'
27	AT&T	FIBER OPTIC CABLE	SR 9	NONE FOUND	8.00'

UTILITY PLAN
U-2

SCALE: 1"=20'

STATE OF CALIFORNIA - DEPARTMENT OF TRANSPORTATION
DESIGN
FUNCTIONAL SUPERVISOR: ARTHUR RAMIREZ
CALCULATED-DESIGNED BY
CHECKED BY
REVISED BY
DATE REVISED

LAST REVISION 10-11-20
DATE PLOTTED => 12/7/2021
TIME PLOTTED => 4:29:53 PM

DocuSign Envelope ID: EF8475C0-0470-4E52-B5B5-25D92AE11799

Dist	COUNTY	ROUTE	POST MILES TOTAL PROJECT	SHEET No.	TOTAL SHEETS
05	SCr	9	13.6/15.5		XX

REGISTERED CIVIL ENGINEER DATE

PLANS APPROVAL DATE

REGISTERED PROFESSIONAL ENGINEER No. Exp. CIVIL STATE OF CALIFORNIA

THE STATE OF CALIFORNIA OR ITS OFFICERS OR AGENTS SHALL NOT BE RESPONSIBLE FOR THE ACCURACY OR COMPLETENESS OF SCANNED COPIES OF THIS PLAN SHEET.

NOTE:

FOR ACCURATE RIGHT OF WAY DATA, CONTACT RIGHT OF WAY ENGINEERING AT THE DISTRICT OFFICE.

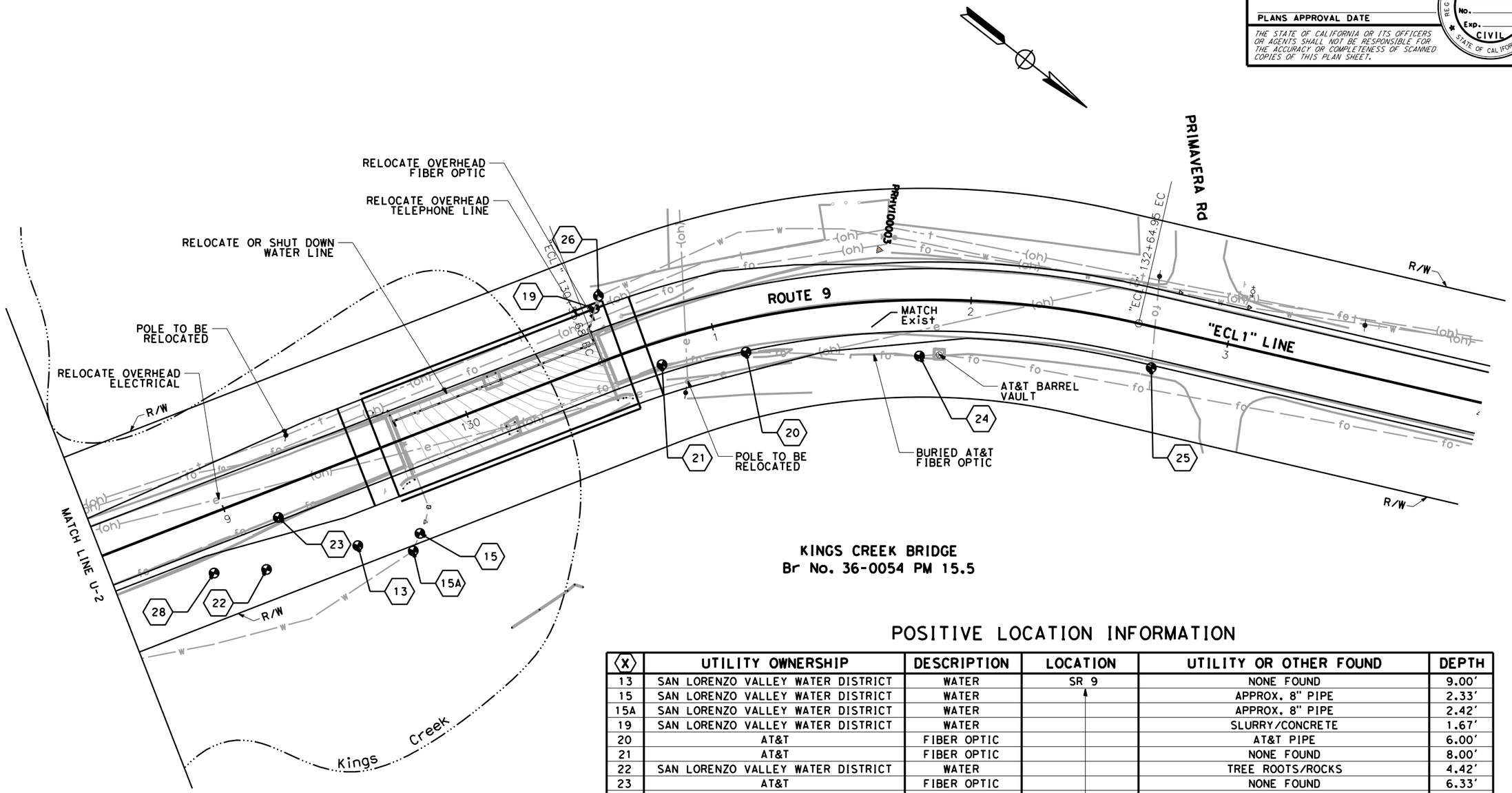

KINGS CREEK BRIDGE
Br No. 36-0054 PM 15.5

POSITIVE LOCATION INFORMATION

(X)	UTILITY OWNERSHIP	DESCRIPTION	LOCATION	UTILITY OR OTHER FOUND	DEPTH
13	SAN LORENZO VALLEY WATER DISTRICT	WATER	SR 9	NONE FOUND	9.00'
15	SAN LORENZO VALLEY WATER DISTRICT	WATER		APPROX. 8" PIPE	2.33'
15A	SAN LORENZO VALLEY WATER DISTRICT	WATER		APPROX. 8" PIPE	2.42'
19	SAN LORENZO VALLEY WATER DISTRICT	WATER		SLURRY/CONCRETE	1.67'
20	AT&T	FIBER OPTIC		AT&T PIPE	6.00'
21	AT&T	FIBER OPTIC		NONE FOUND	8.00'
22	SAN LORENZO VALLEY WATER DISTRICT	WATER		TREE ROOTS/ROCKS	4.42'
23	AT&T	FIBER OPTIC		NONE FOUND	6.33'
24	AT&T	FIBER OPTIC		AT&T PIPE	4.00'
25	AT&T	FIBER OPTIC		PIPE FOUND (PERPENDICULAR TO ROADWAY)	3.25'
26	SAN LORENZO VALLEY WATER DISTRICT	WATER		8" WATER	2.50"
28	SAN LORENZO VALLEY WATER DISTRICT	WATER	SR 9	NONE FOUND	9.00'

UTILITY PLAN
U-3

SCALE: 1"=20'

STATE OF CALIFORNIA - DEPARTMENT OF TRANSPORTATION

DESIGN

FUNCTIONAL SUPERVISOR: ARTHUR RAMIREZ

CALCULATED-DESIGNED BY | CHECKED BY

REVISED BY | DATE REVISED

LAST REVISION 10-12-20

DATE PLOTTED => 12/7/2021
TIME PLOTTED => 4:41:43 PM

DocuSign Envelope ID: EF8475C0-0470-4E52-B5B5-25D92AE11799

Dist	COUNTY	ROUTE	POST MILES TOTAL PROJECT	SHEET No.	TOTAL SHEETS
05	SCr	9	13.6/15.5	53	XX

REGISTERED CIVIL ENGINEER DATE

PLANS APPROVAL DATE

REGISTERED PROFESSIONAL ENGINEER No. Exp. CIVIL STATE OF CALIFORNIA

THE STATE OF CALIFORNIA OR ITS OFFICERS OR AGENTS SHALL NOT BE RESPONSIBLE FOR THE ACCURACY OR COMPLETENESS OF SCANNED COPIES OF THIS PLAN SHEET.

NOTE:

1. FOR ACCURATE RIGHT OF WAY DATA, CONTACT RIGHT OF WAY ENGINEERING AT THE DISTRICT OFFICE.
2. ONE-WAY TRAFFIC CONTROL REQUIRED
4. ALL WORK DONE BEHIND K-RAIL
5. CLOSURE POUR TO BE DONE IN STAGE 2

CONSTRUCTION - STAGE 1

WORK DONE FOR SOUTHBOUND SIDE
SB TRAFFIC SHIFTED TO NB LANE FOR ONE WAY TRAFFIC
1. DEMO AND RECONSTRUCT WEST SIDE OF STRUCTURE, AS SHOWN IN SECTION A-A
2. WIDEN SHOULDER AND TAPER TO Exist
3. INSTALL GUARDRAIL

LEGEND:

- CONSTRUCTION THIS STAGE
- CONSTRUCTION COMPLETED IN PREVIOUS STAGE
- STAGING AREA

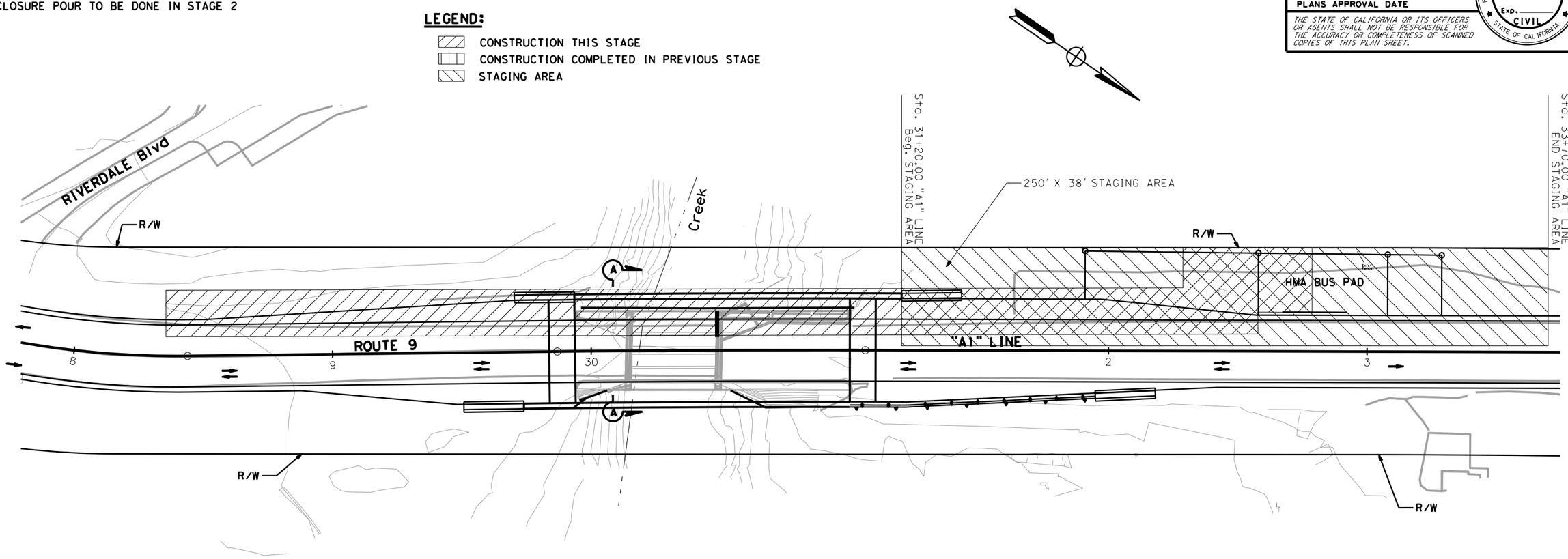

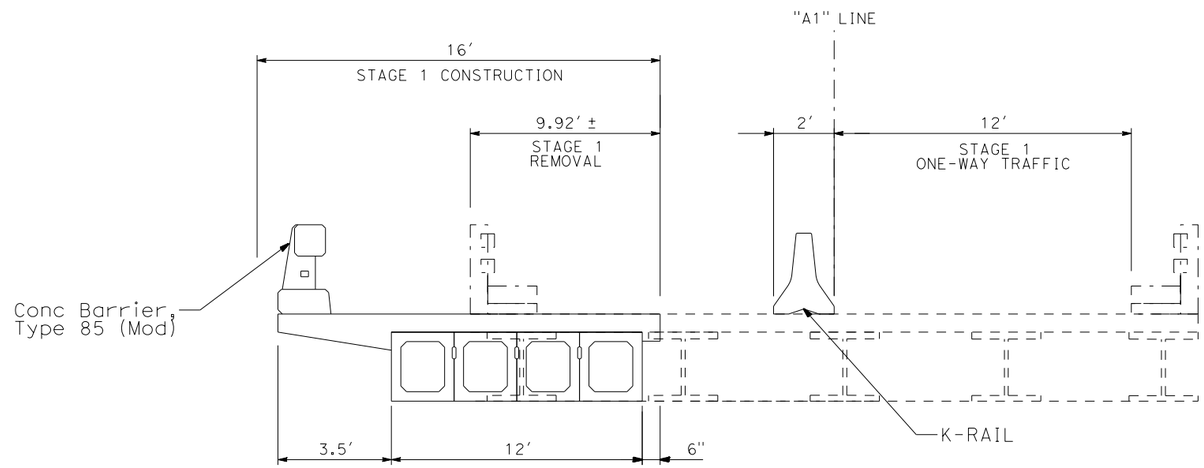

SECTION A-A

SAN LORENZO RIVER BRIDGE
PM 13.6

STAGE CONSTRUCTION
STAGE 1 **SC-1**

NO SCALE

STATE OF CALIFORNIA - DEPARTMENT OF TRANSPORTATION
DESIGN

FUNCTIONAL SUPERVISOR: ARTHUR RAMIREZ
CALCULATED-DESIGNED BY: DIANA ROSAS
CHECKED BY: JOHNNY REYES
REVISED BY
DATE REVISED

LAST REVISION 10-01-21
DATE PLOTTED => 12/7/2021
TIME PLOTTED => 9:54:55 AM

DocuSign Envelope ID: EF8475C0-0470-4E52-B5B5-25D92AE11799

Dist	COUNTY	ROUTE	POST MILES TOTAL PROJECT	SHEET No.	TOTAL SHEETS
05	SCr	9	13.6/15.5	53	XX

REGISTERED CIVIL ENGINEER DATE

PLANS APPROVAL DATE

REGISTERED PROFESSIONAL ENGINEER No. Exp. CIVIL STATE OF CALIFORNIA

THE STATE OF CALIFORNIA OR ITS OFFICERS OR AGENTS SHALL NOT BE RESPONSIBLE FOR THE ACCURACY OR COMPLETENESS OF SCANNED COPIES OF THIS PLAN SHEET.

NOTE:

1. FOR ACCURATE RIGHT OF WAY DATA, CONTACT RIGHT OF WAY ENGINEERING AT THE DISTRICT OFFICE.
2. ONE-WAY TRAFFIC CONTROL REQUIRED
3. ALL WORK EXCEPT FOR COLD PLANE AND HMA OVERLAY DONE BEHIND K-RAIL
4. COLD PLANE AND HMA OVERLAY WILL BE DONE UNDER FLAGGING OPERATIONS

CONSTRUCTION - STAGE 2

WORK DONE FOR NORTHBOUND SIDE
NB TRAFFIC SHIFTED TO SB LANE FOR ONE WAY TRAFFIC
1. DEMO AND RECONSTRUCT EAST SIDE OF STRUCTURE, AS SHOWN IN SECTION B-B
2. CONSTRUCT RETAINING WALL
3. WIDEN SHOULDER AND TAPER TO Exist
4. INSTALL GUARDRAIL
5. COLD PLANE AND HMA OVERLAY BETWEEN PROPOSED Lt ETW AND Rt ETW

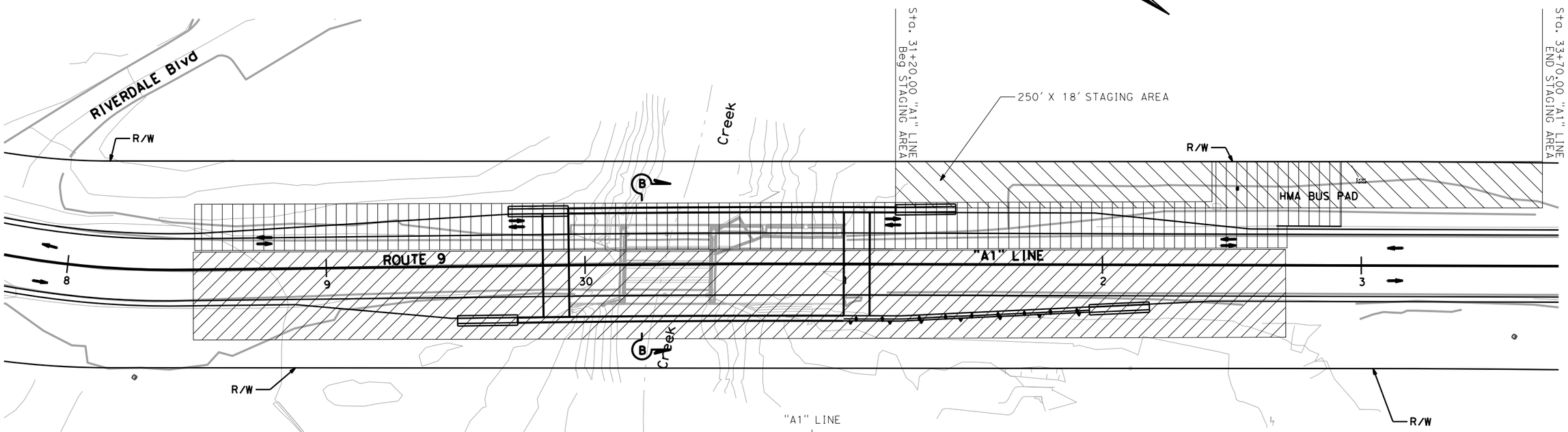

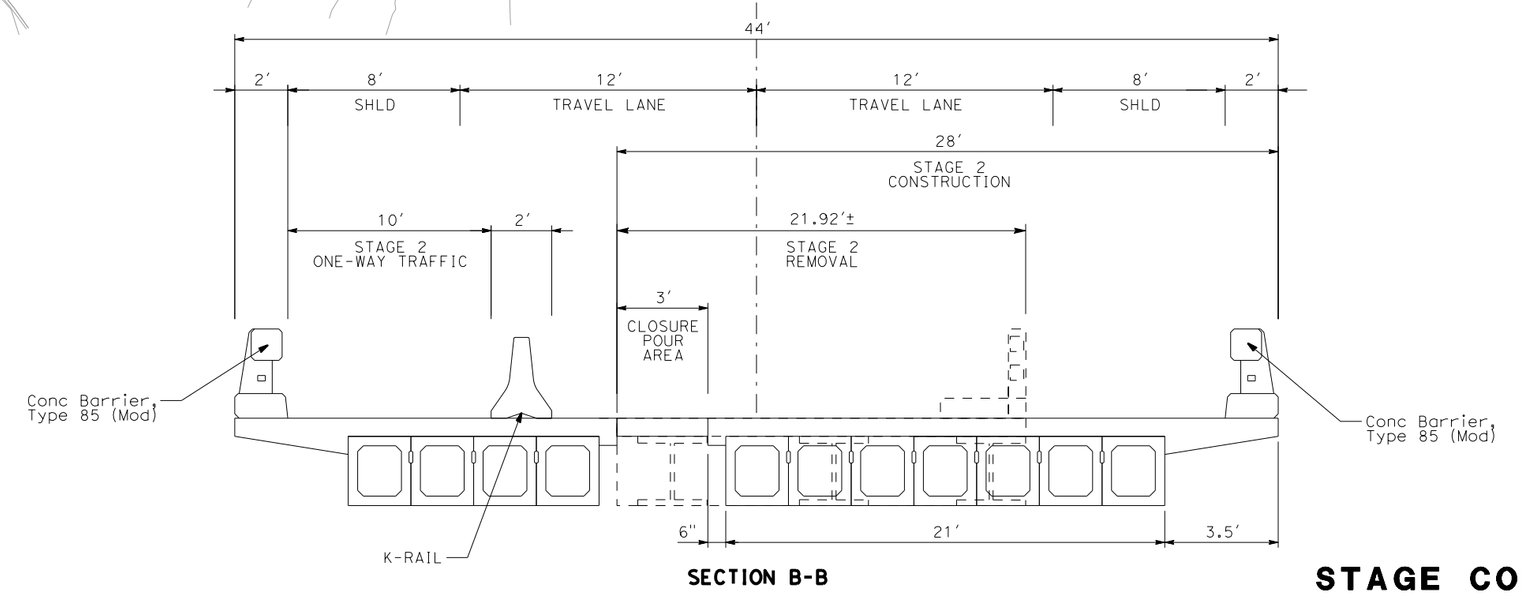

SECTION B-B

SAN LORENZO RIVER BRIDGE
PM 13.6

STAGE CONSTRUCTION
STAGE 2 SC-2
NO SCALE

REVISED BY	DATE REVISED
DIANA ROSAS	JOHNNY REYES
CALCULATED-DESIGNED BY	CHECKED BY
FUNCTIONAL SUPERVISOR	ARTHUR RAMIREZ

STATE OF CALIFORNIA - DEPARTMENT OF TRANSPORTATION
DESIGN

LAST REVISION 10-01-21 | DATE PLOTTED => 12/7/2021 TIME PLOTTED => 4:47:42 PM

DocuSign Envelope ID: EF8475C0-0470-4E52-B5B5-25D92AE11799

Dist	COUNTY	ROUTE	POST MILES TOTAL PROJECT	SHEET No.	TOTAL SHEETS
05	SCr	9	13.6/15.5	53	XX

REGISTERED CIVIL ENGINEER DATE

PLANS APPROVAL DATE

REGISTERED PROFESSIONAL ENGINEER No. Exp. CIVIL STATE OF CALIFORNIA

THE STATE OF CALIFORNIA OR ITS OFFICERS OR AGENTS SHALL NOT BE RESPONSIBLE FOR THE ACCURACY OR COMPLETENESS OF SCANNED COPIES OF THIS PLAN SHEET.

NOTE:

1. FOR ACCURATE RIGHT OF WAY DATA, CONTACT RIGHT OF WAY ENGINEERING AT THE DISTRICT OFFICE.
2. ONE-WAY TRAFFIC CONTROL REQUIRED
3. ALL WORK DONE BEHIND K-RAIL

CONSTRUCTION - STAGE 1

WORK DONE FOR SOUTHBOUND SIDE
SB TRAFFIC SHIFTED TO NB LANE FOR ONE WAY TRAFFIC

1. CONSTRUCT RETAINING WALL
2. WIDEN SHOULDER AND TAPER TO Exist
3. INSTALL GUARDRAIL

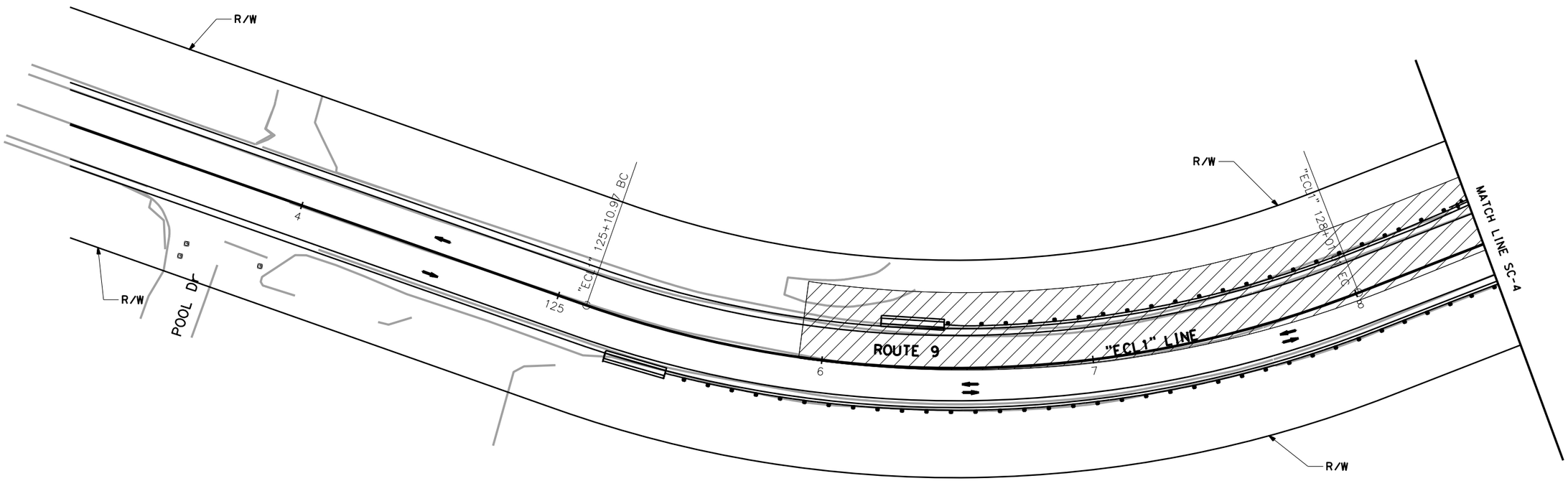

KINGS CREEK BRIDGE
Br No. 36-0054 PM 15.5

STAGE CONSTRUCTION
STAGE 1 **SC-3**
NO SCALE

STATE OF CALIFORNIA - DEPARTMENT OF TRANSPORTATION
Caltrans
DESIGN

FUNCTIONAL SUPERVISOR: ARTHUR RAMIREZ
CALCULATED-DESIGNED BY: DIANA ROSAS
CHECKED BY: JOHNNY REYES
REVISED BY
DATE REVISED

LAST REVISION 10-01-21
DATE PLOTTED => 12/7/2021
TIME PLOTTED => 4:53:09 PM

DocuSign Envelope ID: EF8475C0-0470-4E52-B5B5-25D92AE11799

Dist	COUNTY	ROUTE	POST MILES TOTAL PROJECT	SHEET No.	TOTAL SHEETS
05	SCr	9	13.6/15.5	53	XX

REGISTERED CIVIL ENGINEER DATE

PLANS APPROVAL DATE

REGISTERED PROFESSIONAL ENGINEER No. Exp. CIVIL STATE OF CALIFORNIA

THE STATE OF CALIFORNIA OR ITS OFFICERS OR AGENTS SHALL NOT BE RESPONSIBLE FOR THE ACCURACY OR COMPLETENESS OF SCANNED COPIES OF THIS PLAN SHEET.

NOTE:

1. FOR ACCURATE RIGHT OF WAY DATA, CONTACT RIGHT OF WAY ENGINEERING AT THE DISTRICT OFFICE.
2. ONE-WAY TRAFFIC CONTROL REQUIRED
3. ALL WORK DONE BEHIND K-RAIL
4. CLOSURE POUR TO BE DONE IN STAGE 2

CONSTRUCTION - STAGE 1

WORK DONE FOR SOUTHBOUND SIDE
SB TRAFFIC SHIFTED TO NB LANE FOR ONE WAY TRAFFIC

1. DEMO AND RECONSTRUCT WEST SIDE OF STRUCTURE, AS SHOWN IN SECTION A-A
2. CONSTRUCT RETAINING WALL
3. WIDEN SHOULDER AND TAPER TO Exist
4. INSTALL GUARDRAIL

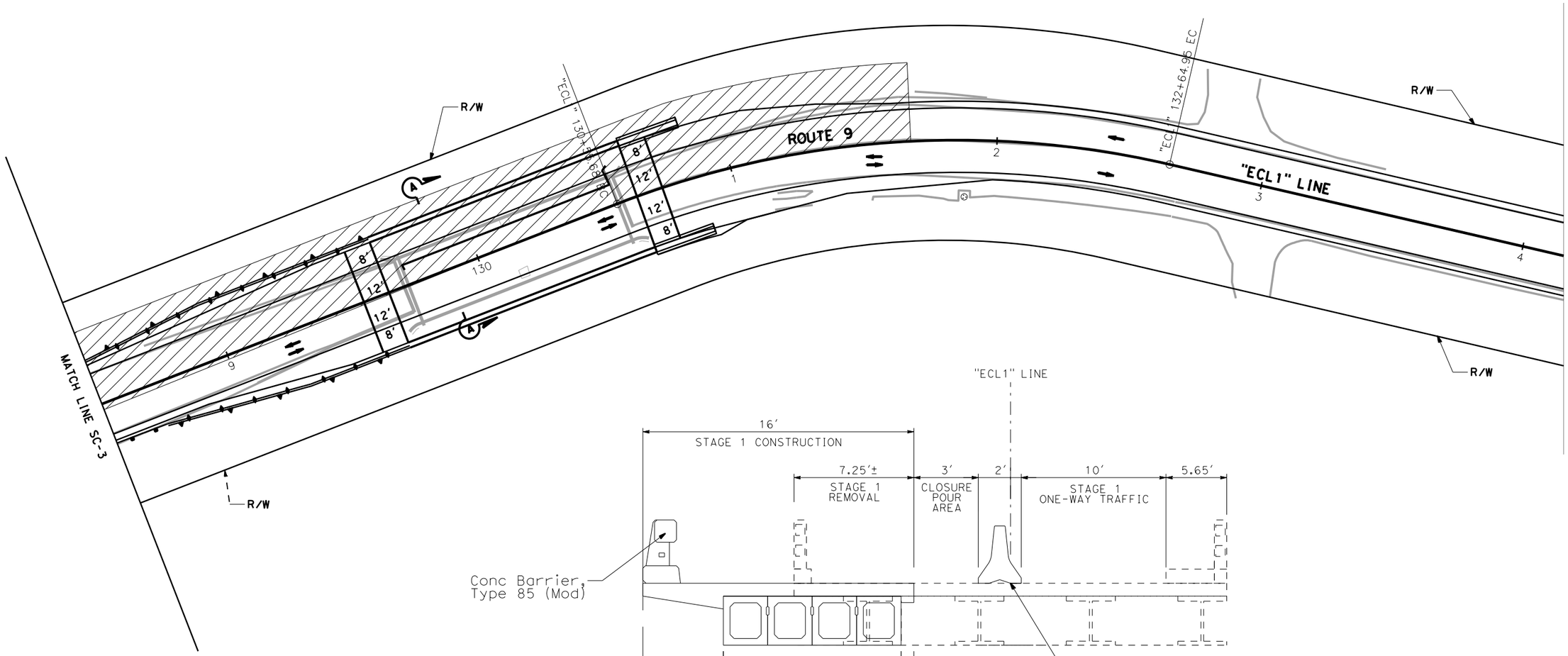

SECTION A-A

KINGS CREEK BRIDGE
Br No. 36-0054 PM 15.5

STAGE CONSTRUCTION
STAGE 1 **SC-4**
NO SCALE

STATE OF CALIFORNIA - DEPARTMENT OF TRANSPORTATION
DESIGN

FUNCTIONAL SUPERVISOR: ARTHUR RAMIREZ
CALCULATED-DESIGNED BY: DIANA ROSAS
CHECKED BY: JOHNNY REYES
REVISED BY
DATE REVISED

LAST REVISION 10-01-21
DATE PLOTTED => 12/7/2021
TIME PLOTTED => 4:59:37 PM

DocuSign Envelope ID: EF8475C0-0470-4E52-B5B5-25D92AE11799

Dist	COUNTY	ROUTE	POST MILES TOTAL PROJECT	SHEET No.	TOTAL SHEETS
05	SCr	9	13.6/15.5	53	XX

REGISTERED CIVIL ENGINEER DATE

PLANS APPROVAL DATE

REGISTERED PROFESSIONAL ENGINEER No. Exp. CIVIL STATE OF CALIFORNIA

THE STATE OF CALIFORNIA OR ITS OFFICERS OR AGENTS SHALL NOT BE RESPONSIBLE FOR THE ACCURACY OR COMPLETENESS OF SCANNED COPIES OF THIS PLAN SHEET.

NOTE:

1. FOR ACCURATE RIGHT OF WAY DATA, CONTACT RIGHT OF WAY ENGINEERING AT THE DISTRICT OFFICE.
2. ONE-WAY TRAFFIC CONTROL REQUIRED
3. ALL WORK EXCEPT FOR COLD PLANE AND HMA OVERLAY DONE BEHIND K-RAIL
4. COLD PLANE AND HMA OVERLAY WILL BE DONE UNDER FLAGGING OPERATIONS

CONSTRUCTION - STAGE 2

WORK DONE FOR NORTHBOUND SIDE
NB TRAFFIC SHIFTED TO SB LANE FOR ONE WAY TRAFFIC
1. CONSTRUCT RETAINING WALL
2. WIDEN SHOULDER AND TAPER TO Exist
3. INSTALL GUARDRAIL

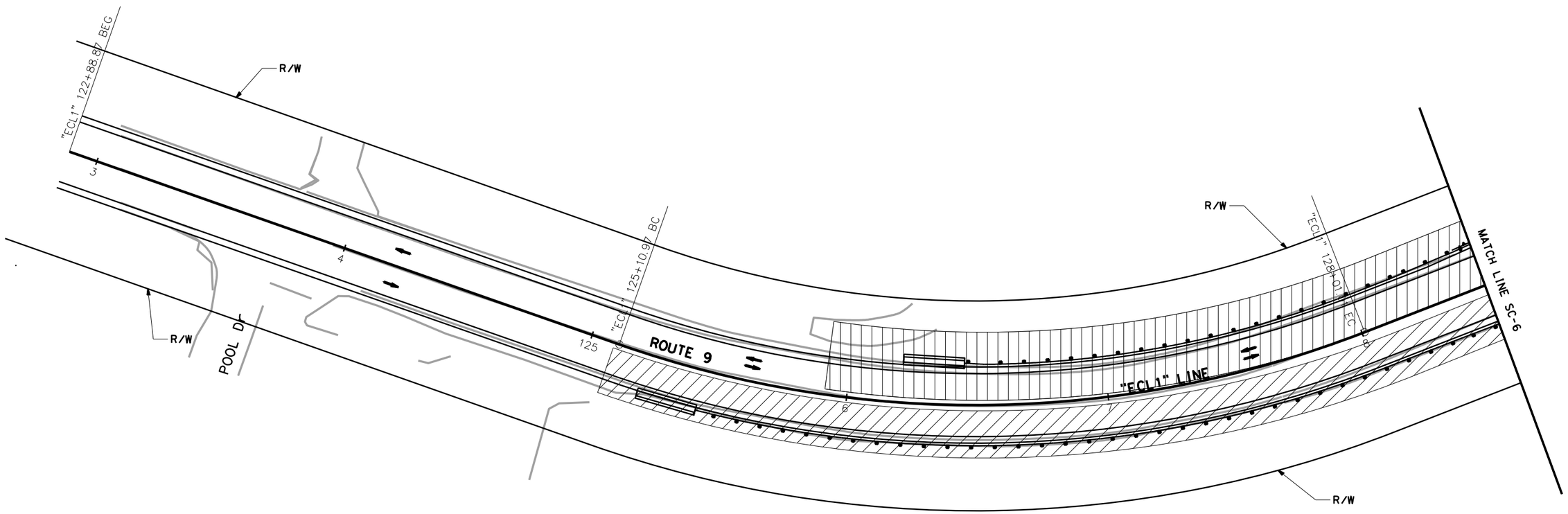

KINGS CREEK BRIDGE
Br No. 36-0054 PM 15.5

STAGE CONSTRUCTION
STAGE 2 **SC-5**
NO SCALE

STATE OF CALIFORNIA - DEPARTMENT OF TRANSPORTATION
Caltrans
DESIGN

FUNCTIONAL SUPERVISOR: ARTHUR RAMIREZ
CALCULATED-DESIGNED BY: DIANA ROSAS
CHECKED BY: JOHNNY REYES
REVISED BY
DATE REVISED

LAST REVISION 10-01-21
DATE PLOTTED => 12/7/2021
TIME PLOTTED => 5:02:49 PM

DocuSign Envelope ID: EF8475C0-0470-4E52-B5B5-25D92AE11799

Dist	COUNTY	ROUTE	POST MILES TOTAL PROJECT	SHEET No.	TOTAL SHEETS
05	SCr	9	13.6/15.5	53	XX

REGISTERED CIVIL ENGINEER DATE

PLANS APPROVAL DATE

REGISTERED PROFESSIONAL ENGINEER No. Exp. CIVIL STATE OF CALIFORNIA

THE STATE OF CALIFORNIA OR ITS OFFICERS OR AGENTS SHALL NOT BE RESPONSIBLE FOR THE ACCURACY OR COMPLETENESS OF SCANNED COPIES OF THIS PLAN SHEET.

NOTE:

1. FOR ACCURATE RIGHT OF WAY DATA, CONTACT RIGHT OF WAY ENGINEERING AT THE DISTRICT OFFICE.
2. ONE-WAY TRAFFIC CONTROL REQUIRED
3. ALL WORK EXCEPT FOR COLD PLANE AND HMA OVERLAY DONE BEHIND K-RAIL
4. COLD PLANE AND HMA OVERLAY WILL BE DONE UNDER FLAGGING OPERATIONS

CONSTRUCTION - STAGE 2

WORK DONE FOR NORTHBOUND SIDE
NB TRAFFIC SHIFTED TO SB LANE FOR ONE WAY TRAFFIC

1. DEMO AND RECONSTRUCT EAST SIDE OF STRUCTURE, AS SHOWN IN SECTION B-B
2. CONSTRUCT RETAINING WALL
3. WIDEN SHOULDER AND TAPER TO Exist
4. INSTALL GUARDRAIL
5. COLD PLANE AND HMA OVERLAY BETWEEN PROPOSED Lt ETW AND Rt ETW

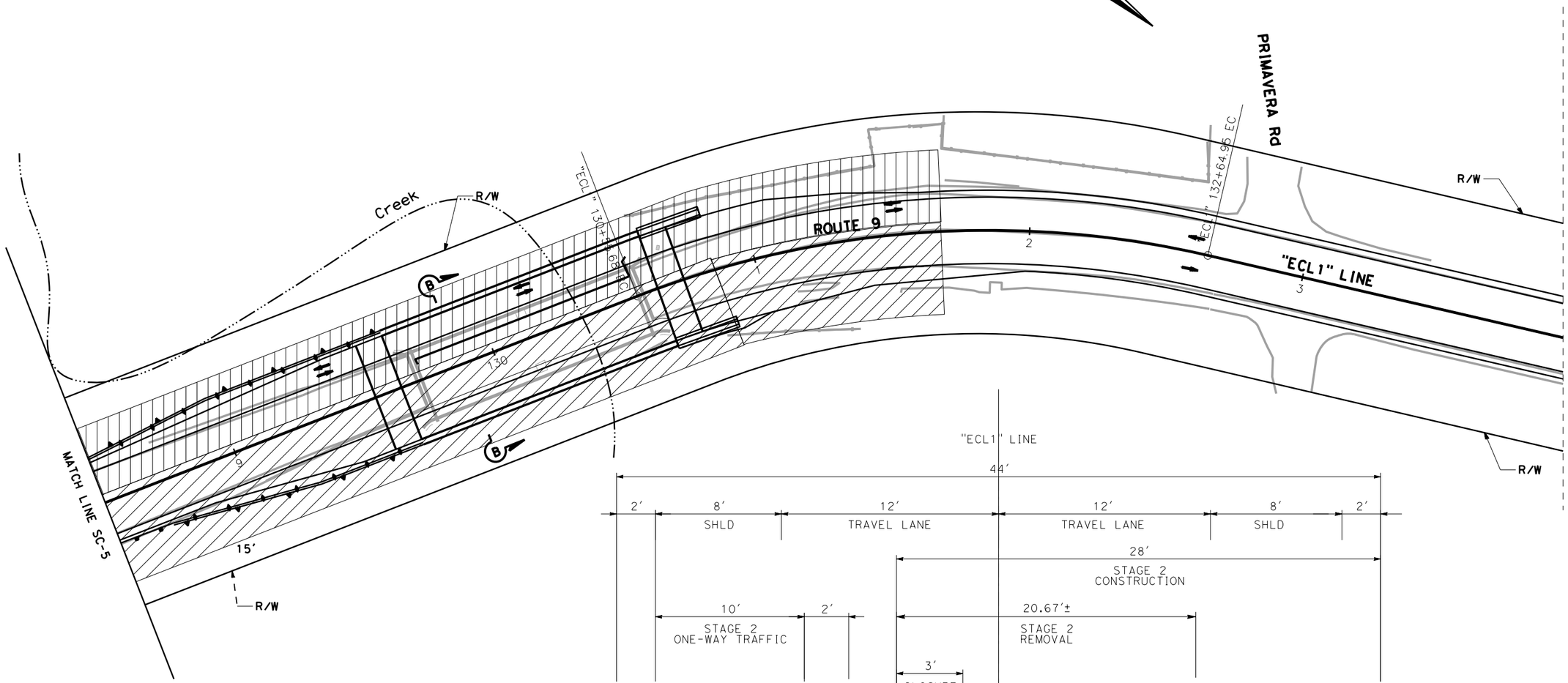

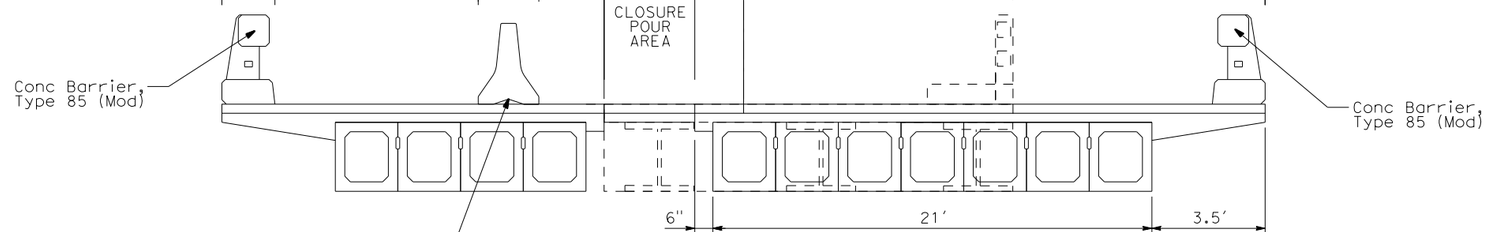

SECTION B-B

KINGS CREEK BRIDGE
Br No. 36-0054 PM 15.5

STAGE CONSTRUCTION
STAGE 2 **SC-6**
NO SCALE

STATE OF CALIFORNIA - DEPARTMENT OF TRANSPORTATION
DESIGN

FUNCTIONAL SUPERVISOR: ARTHUR RAMIREZ
CALCULATED-DESIGNED BY: DIANA ROSAS
CHECKED BY: JOHNNY REYES
REVISED BY
DATE REVISED

LAST REVISION 10-01-21
DATE PLOTTED => 12/7/2021
TIME PLOTTED => 5:05:30 PM

DocuSign Envelope ID: EF8475C0-0470-4E52-B5B5-25D92AE11799

Dist	COUNTY	ROUTE	POST MILES TOTAL PROJECT	SHEET No.	TOTAL SHEETS
05	SCr	9	13.6, 15.5	X	X

REGISTERED CIVIL ENGINEER DATE

PLANS APPROVAL DATE

REGISTERED PROFESSIONAL ENGINEER No. Exp. CIVIL STATE OF CALIFORNIA

THE STATE OF CALIFORNIA OR ITS OFFICERS OR AGENTS SHALL NOT BE RESPONSIBLE FOR THE ACCURACY OR COMPLETENESS OF SCANNED COPIES OF THIS PLAN SHEET.

NOTES:

1. EXACT SIGN LOCATIONS TO BE DETERMINED BY THE ENGINEER.
2. FOR ADDITIONAL CONSTRUCTION AREA SIGNS ARE SHOWN ON TH SHEETS.

STATIONARY MOUNTED CONSTRUCTION AREA SIGNS

SIGN No.	SIGN DESIGNATION	PANEL SIZE	SIGN MESSAGE	No. OF POSTS AND SIZE	No. OF SIGNS
A	W20-1	36" x 36"	ROAD WORK AHEAD	1 - 4" x 6"	9
B	G20-2	36" x 18"	END ROAD WORK	1 - 4" x 4"	4
C	C47B(CA)	96" x 60"	PROJECT FUNDING SIGN	2 - 6" x 6"	2

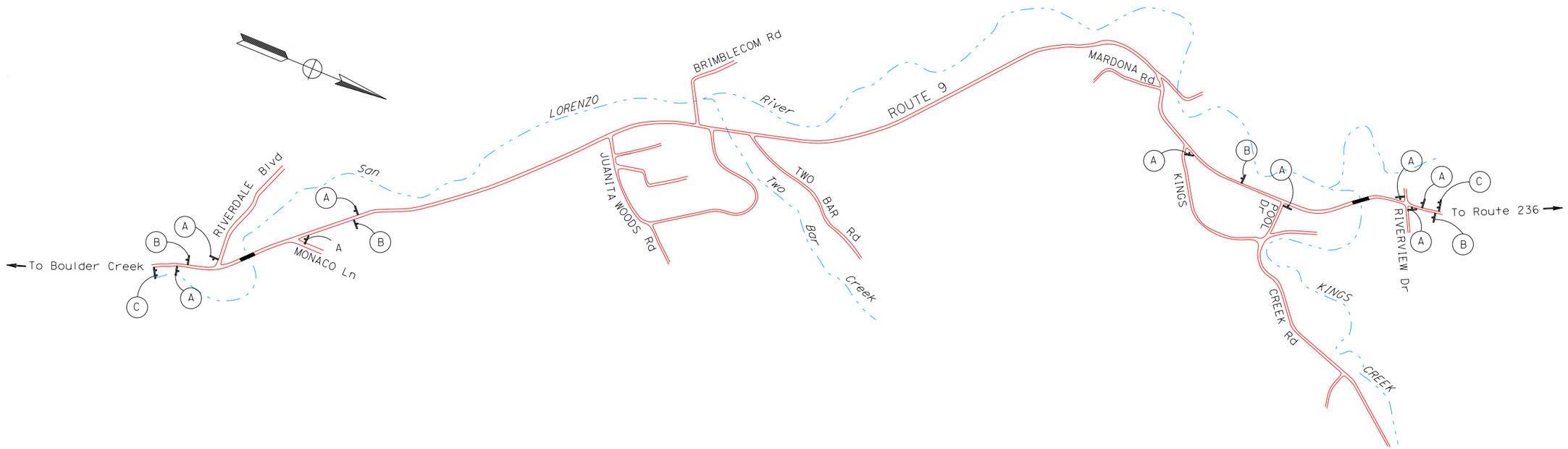

CONSTRUCTION AREA SIGNS

NO SCALE

CS-1

APPROVED FOR CONSTRUCTION AREA SIGNS WORK ONLY

STATE OF CALIFORNIA - DEPARTMENT OF TRANSPORTATION

Caltrans® **TRAFFIC DESIGN**

FUNCTIONAL SUPERVISOR: MOHAMMED QATAMI

CALCULATED-DESIGNED BY: TAM LA

CHECKED BY: APURVA GOKAL

REVISED BY

DATE REVISED

LAST REVISION 11-04-21

DATE PLOTTED => $DATE
TIME PLOTTED => $TIME

BORDER LAST REVISED 7/2/2010

USERNAME => $USER
DGN FILE => $REQUEST

RELATIVE BORDER SCALE IS IN INCHES 0 1 2 3

UNIT 1513

PROJECT NUMBER & PHASE 05160000781

DocuSign Envelope ID: EF8475C0-0470-4E52-B5B5-25D92AE11799

Dist	COUNTY	ROUTE	POST MILES TOTAL PROJECT	SHEET No.	TOTAL SHEETS
05	SCr	9	13.6, 15.5		XX

REGISTERED CIVIL ENGINEER DATE

PLANS APPROVAL DATE

REGISTERED PROFESSIONAL ENGINEER No. Exp. CIVIL STATE OF CALIFORNIA

THE STATE OF CALIFORNIA OR ITS OFFICERS OR AGENTS SHALL NOT BE RESPONSIBLE FOR THE ACCURACY OR COMPLETENESS OF SCANNED COPIES OF THIS PLAN SHEET.

LEGEND:

- CONSTRUCTION AREA
- TEMPORARY RAILING (TYPE K)
- CHANNELIZER (SURFACED MOUNTED)
- XX TEMPORARY TRAFFIC STRIPE DETAIL NUMBER

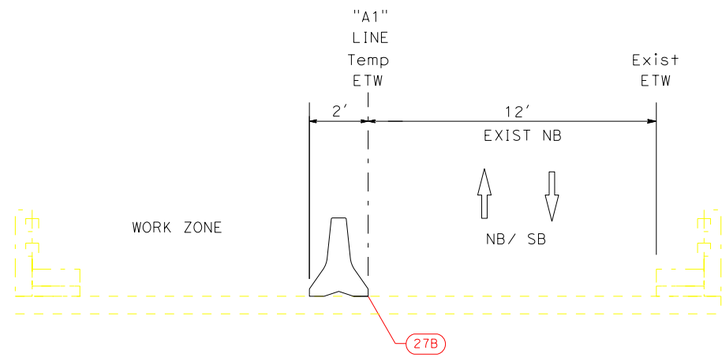

SECTION A-A

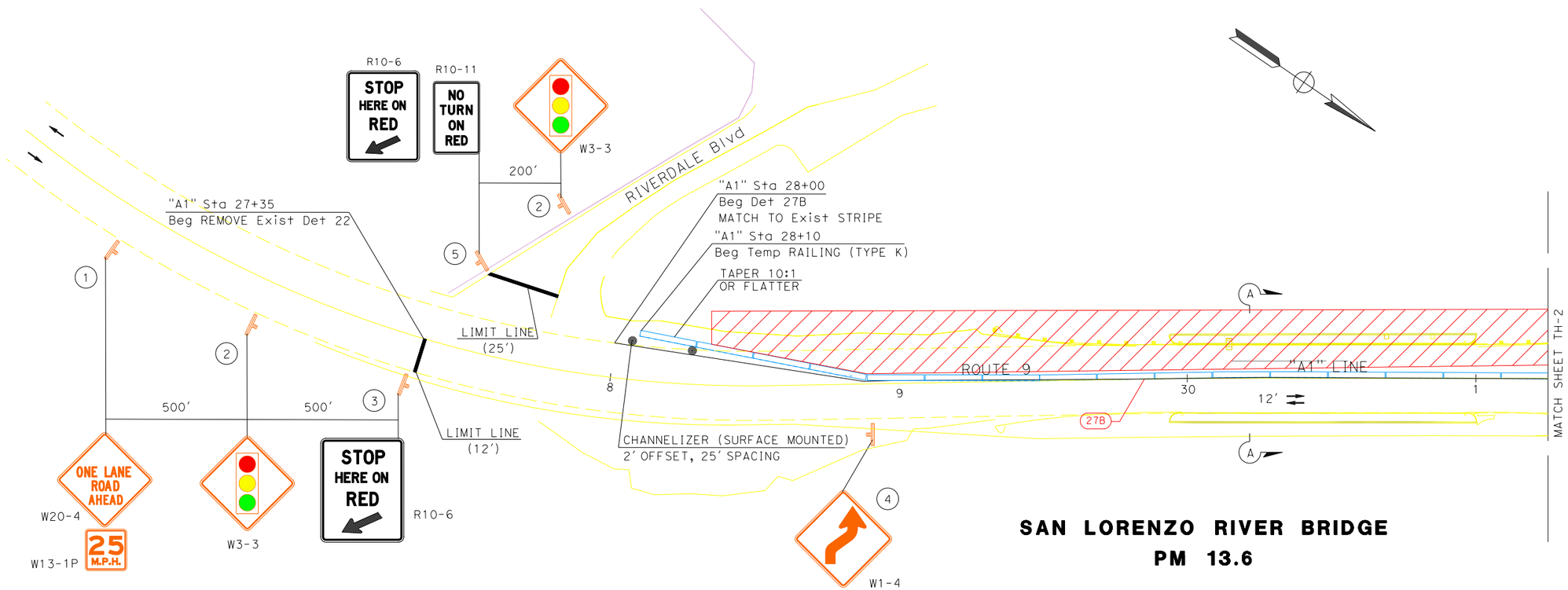

SAN LORENZO RIVER BRIDGE
PM 13.6

TRAFFIC HANDLING PLAN
STAGE 1
TH-1

NO SCALE

APPROVED FOR TRAFFIC HANDLING WORK ONLY

STATE OF CALIFORNIA - DEPARTMENT OF TRANSPORTATION
TRAFFIC DESIGN
Caltrans

FUNCTIONAL SUPERVISOR: MOHAMMED OATAMI
CALCULATED-DESIGNED BY: TAM LA
CHECKED BY: APURVA GOKAL
REVISED BY
DATE REVISED

LAST REVISION 11-04-21
DATE PLOTTED => $DATE
TIME PLOTTED => $TIME

BORDER LAST REVISED 7/2/2010
USERNAME => $USER
DGN FILE => $REQUEST
RELATIVE BORDER SCALE IS IN INCHES 0 1 2 3
UNIT 1513
PROJECT NUMBER & PHASE 05160000781

DocuSign Envelope ID: EF8475C0-0470-4E52-B5B5-25D92AE11799

Dist	COUNTY	ROUTE	POST MILES TOTAL PROJECT	SHEET No.	TOTAL SHEETS
05	SCr	9	13.6, 15.5		XX

REGISTERED CIVIL ENGINEER DATE

PLANS APPROVAL DATE

REGISTERED PROFESSIONAL ENGINEER No. Exp. CIVIL STATE OF CALIFORNIA

THE STATE OF CALIFORNIA OR ITS OFFICERS OR AGENTS SHALL NOT BE RESPONSIBLE FOR THE ACCURACY OR COMPLETENESS OF SCANNED COPIES OF THIS PLAN SHEET.

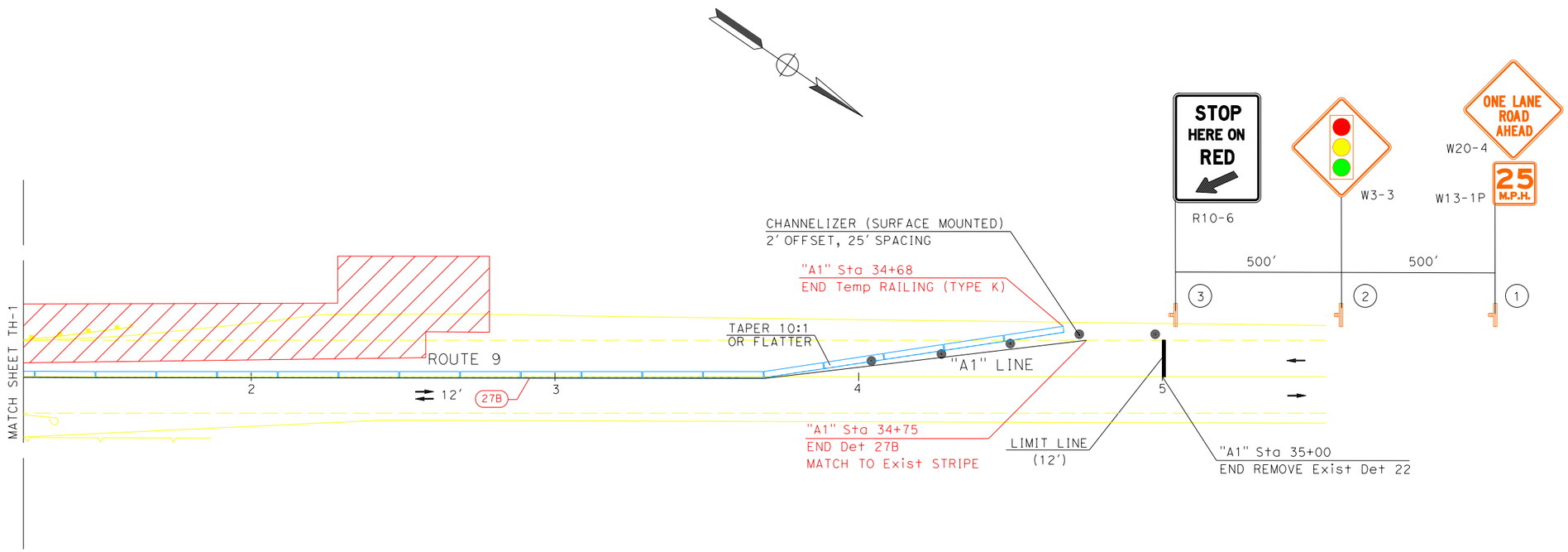

TRAFFIC HANDLING PLAN
STAGE 1
TH-2

NO SCALE

APPROVED FOR TRAFFIC HANDLING WORK ONLY

CALCULATED-DESIGNED BY	TAM LA	REVISED BY	
CHECKED BY	APURVA GOKAL	DATE REVISED	

FUNCTIONAL SUPERVISOR: MOHAMMED OATAMI

STATE OF CALIFORNIA - DEPARTMENT OF TRANSPORTATION

Caltrans®

TRAFFIC DESIGN

LAST REVISION 11-04-21 | DATE PLOTTED => $DATE | TIME PLOTTED => $TIME

DocuSign Envelope ID: EF8475C0-0470-4E52-B5B5-25D92AE11799

Dist	COUNTY	ROUTE	POST MILES TOTAL PROJECT	SHEET No.	TOTAL SHEETS
05	SCr	9	13.6, 15.5		XX

REGISTERED CIVIL ENGINEER DATE

PLANS APPROVAL DATE

REGISTERED PROFESSIONAL ENGINEER No. Exp. CIVIL STATE OF CALIFORNIA

THE STATE OF CALIFORNIA OR ITS OFFICERS OR AGENTS SHALL NOT BE RESPONSIBLE FOR THE ACCURACY OR COMPLETENESS OF SCANNED COPIES OF THIS PLAN SHEET.

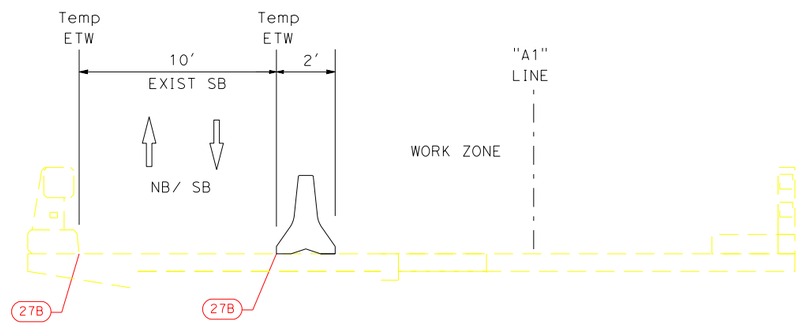

SECTION B-B

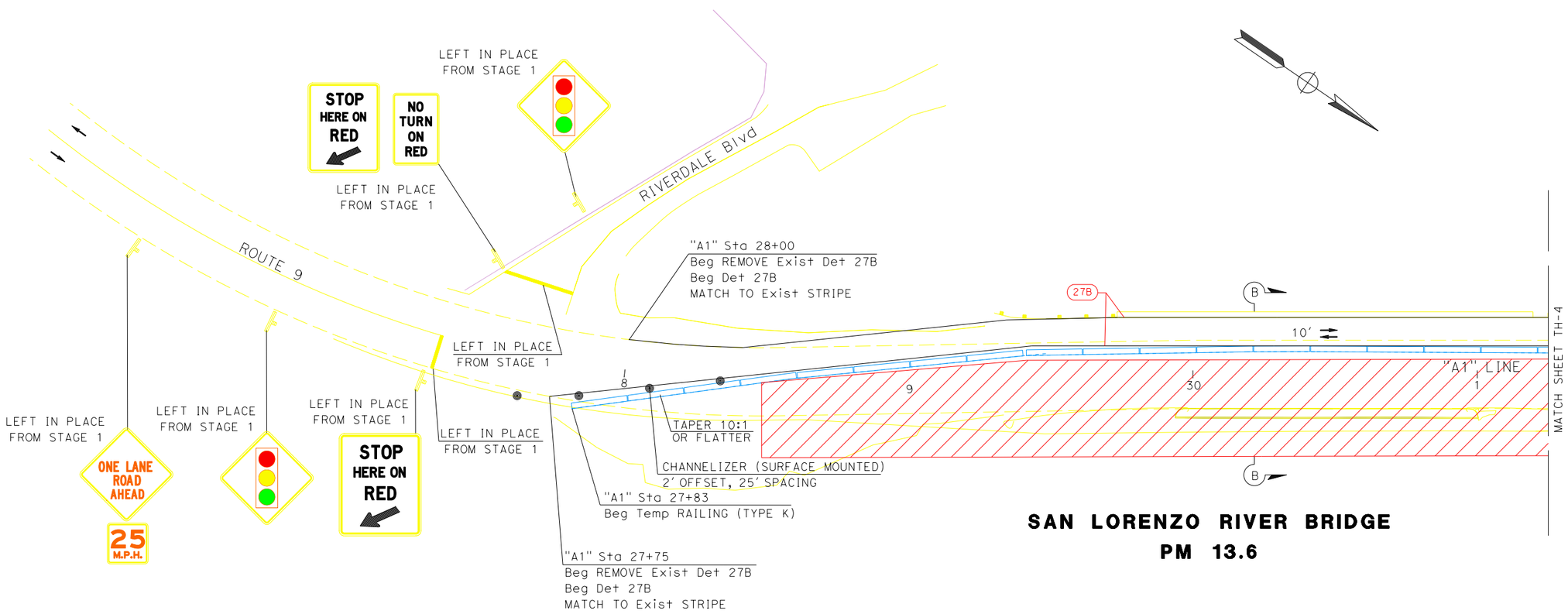

TRAFFIC HANDLING PLAN
STAGE 2
TH-3

NO SCALE

APPROVED FOR TRAFFIC HANDLING WORK ONLY

STATE OF CALIFORNIA - DEPARTMENT OF TRANSPORTATION
TRAFFIC DESIGN
Caltrans®

FUNCTIONAL SUPERVISOR: MOHAMMED OATAMI
CALCULATED-DESIGNED BY: TAM LA
CHECKED BY: APURVA GOKAL
REVISED BY
DATE REVISED

LAST REVISION 11-04-21
DATE PLOTTED => $DATE
TIME PLOTTED => $TIME

BORDER LAST REVISED 7/2/2010 | USERNAME => $USER | DGN FILE => $REQUEST | RELATIVE BORDER SCALE IS IN INCHES 0 1 2 3 | UNIT 1513 | PROJECT NUMBER & PHASE 05160000781

DocuSign Envelope ID: EF8475C0-0470-4E52-B5B5-25D92AE11799

Dist	COUNTY	ROUTE	POST MILES TOTAL PROJECT	SHEET No.	TOTAL SHEETS
05	SCr	9	13.6, 15.5		XX

REGISTERED CIVIL ENGINEER DATE

PLANS APPROVAL DATE

REGISTERED PROFESSIONAL ENGINEER No. Exp. CIVIL STATE OF CALIFORNIA

THE STATE OF CALIFORNIA OR ITS OFFICERS OR AGENTS SHALL NOT BE RESPONSIBLE FOR THE ACCURACY OR COMPLETENESS OF SCANNED COPIES OF THIS PLAN SHEET.

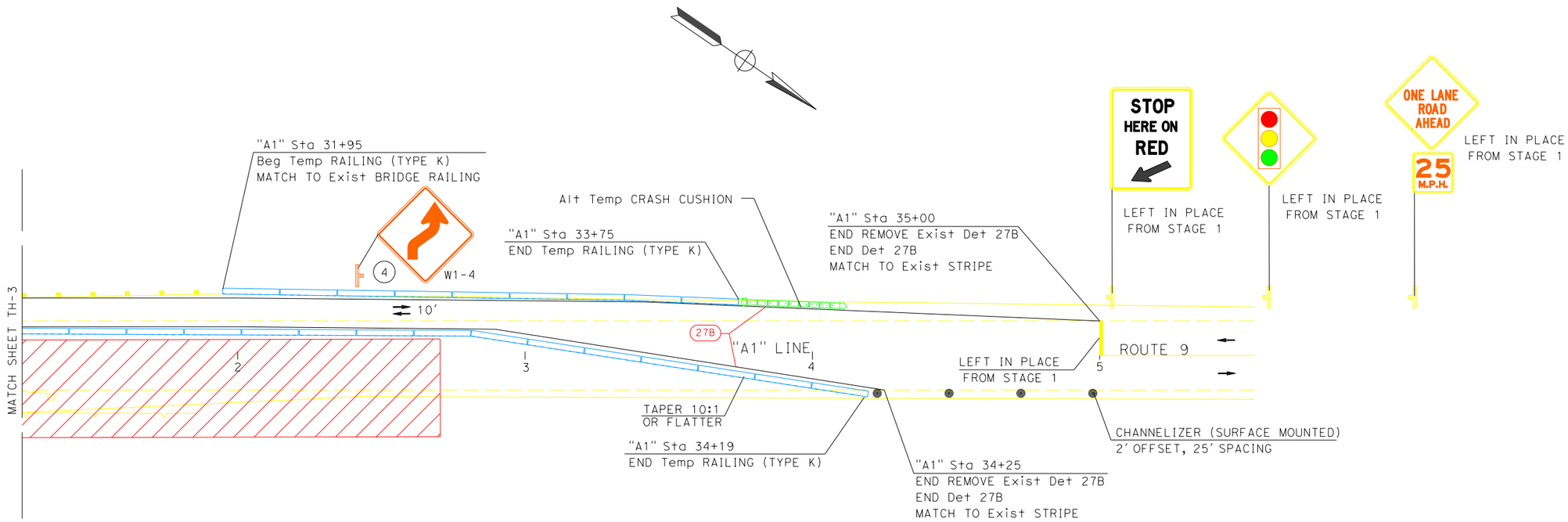

TRAFFIC HANDLING PLAN
STAGE 2
TH-4

NO SCALE

APPROVED FOR TRAFFIC HANDLING WORK ONLY

STATE OF CALIFORNIA - DEPARTMENT OF TRANSPORTATION
Caltrans
TRAFFIC DESIGN

FUNCTIONAL SUPERVISOR: MOHAMMED QATAMI
CALCULATED-DESIGNED BY: TAM LA
CHECKED BY: APURVA GOKAL
REVISED BY
DATE REVISED

LAST REVISION 11-04-21
DATE PLOTTED => $DATE
TIME PLOTTED => $TIME

DocuSign Envelope ID: EF8475C0-0470-4E52-B5B5-25D92AE11799

Dist	COUNTY	ROUTE	POST MILES TOTAL PROJECT	SHEET No.	TOTAL SHEETS
05	SCr	9	13.6, 15.5		XX

REGISTERED CIVIL ENGINEER DATE

PLANS APPROVAL DATE

REGISTERED PROFESSIONAL ENGINEER No. Exp. CIVIL STATE OF CALIFORNIA

THE STATE OF CALIFORNIA OR ITS OFFICERS OR AGENTS SHALL NOT BE RESPONSIBLE FOR THE ACCURACY OR COMPLETENESS OF SCANNED COPIES OF THIS PLAN SHEET.

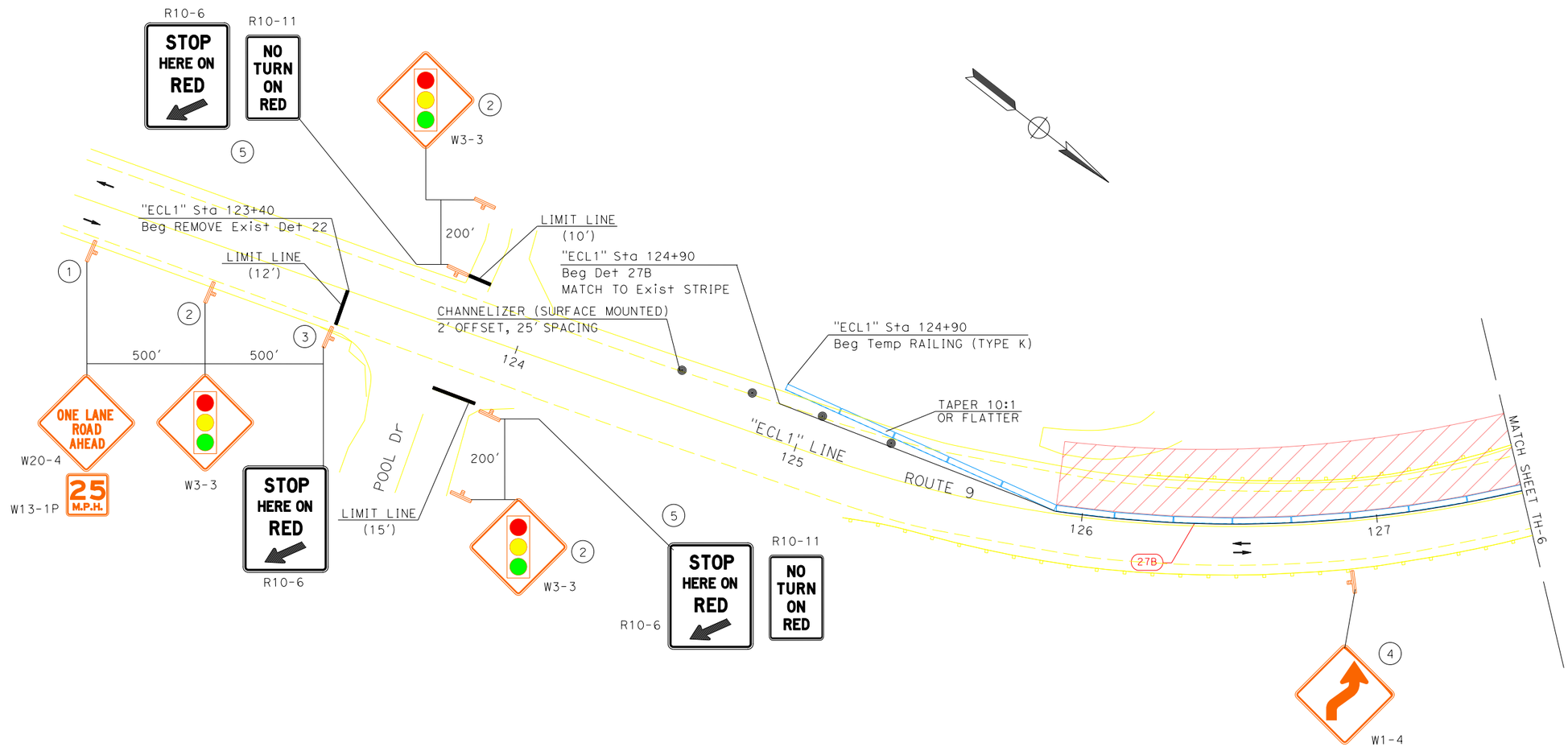

KINGS CREEK BRIDGE
Br No. 36-0054 PM 15.5

TRAFFIC HANDLING PLAN
STAGE 1 **TH-5**

NO SCALE

STATE OF CALIFORNIA - DEPARTMENT OF TRANSPORTATION
Caltrans
TRAFFIC DESIGN

FUNCTIONAL SUPERVISOR: MOHAMMED QATAMI
CALCULATED-DESIGNED BY: TAM LA
CHECKED BY: APURVA GOKAL
REVISED BY
DATE REVISED

LAST REVISION 11-04-21
DATE PLOTTED => $DATE
TIME PLOTTED => $TIME

DocuSign Envelope ID: EF8475C0-0470-4E52-B5B5-25D92AE11799

Dist	COUNTY	ROUTE	POST MILES TOTAL PROJECT	SHEET No.	TOTAL SHEETS
05	SCr	9	13.6, 15.5		XX

REGISTERED CIVIL ENGINEER DATE

PLANS APPROVAL DATE

REGISTERED PROFESSIONAL ENGINEER No. Exp. CIVIL STATE OF CALIFORNIA

THE STATE OF CALIFORNIA OR ITS OFFICERS OR AGENTS SHALL NOT BE RESPONSIBLE FOR THE ACCURACY OR COMPLETENESS OF SCANNED COPIES OF THIS PLAN SHEET.

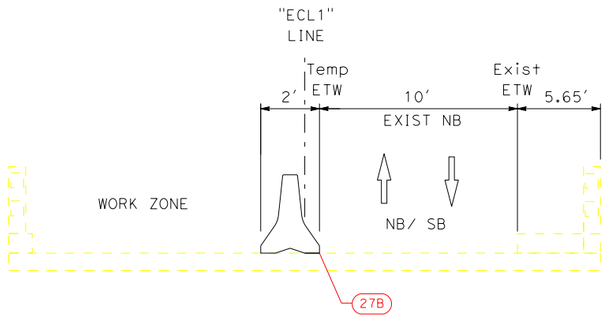

SECTION C-C

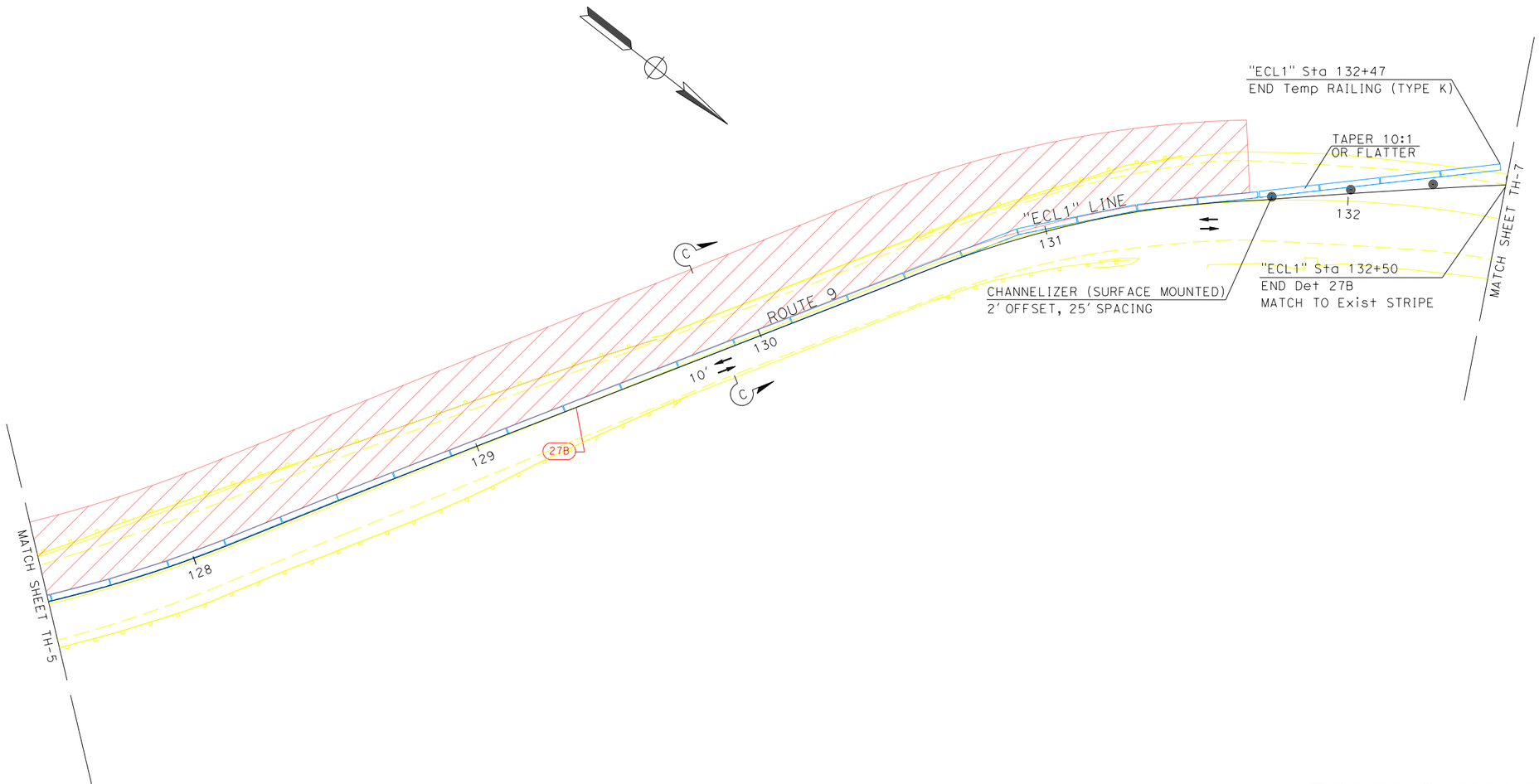

TRAFFIC HANDLING PLAN

STAGE 1

TH-6

NO SCALE

STATE OF CALIFORNIA - DEPARTMENT OF TRANSPORTATION

Caltrans®

TRAFFIC DESIGN

FUNCTIONAL SUPERVISOR: MOHAMMED OATAMI

CALCULATED-DESIGNED BY: TAM LA

CHECKED BY: APURVA GOKAL

REVISED BY

DATE REVISED

LAST REVISION 11-04-21

DATE PLOTTED => $DATE

TIME PLOTTED => $TIME

DocuSign Envelope ID: EF8475C0-0470-4E52-B5B5-25D92AE11799

Dist	COUNTY	ROUTE	POST MILES TOTAL PROJECT	SHEET No.	TOTAL SHEETS
05	SCr	9	13.6, 15.5		XX

REGISTERED CIVIL ENGINEER DATE

PLANS APPROVAL DATE

REGISTERED PROFESSIONAL ENGINEER No. Exp. CIVIL STATE OF CALIFORNIA

THE STATE OF CALIFORNIA OR ITS OFFICERS OR AGENTS SHALL NOT BE RESPONSIBLE FOR THE ACCURACY OR COMPLETENESS OF SCANNED COPIES OF THIS PLAN SHEET.

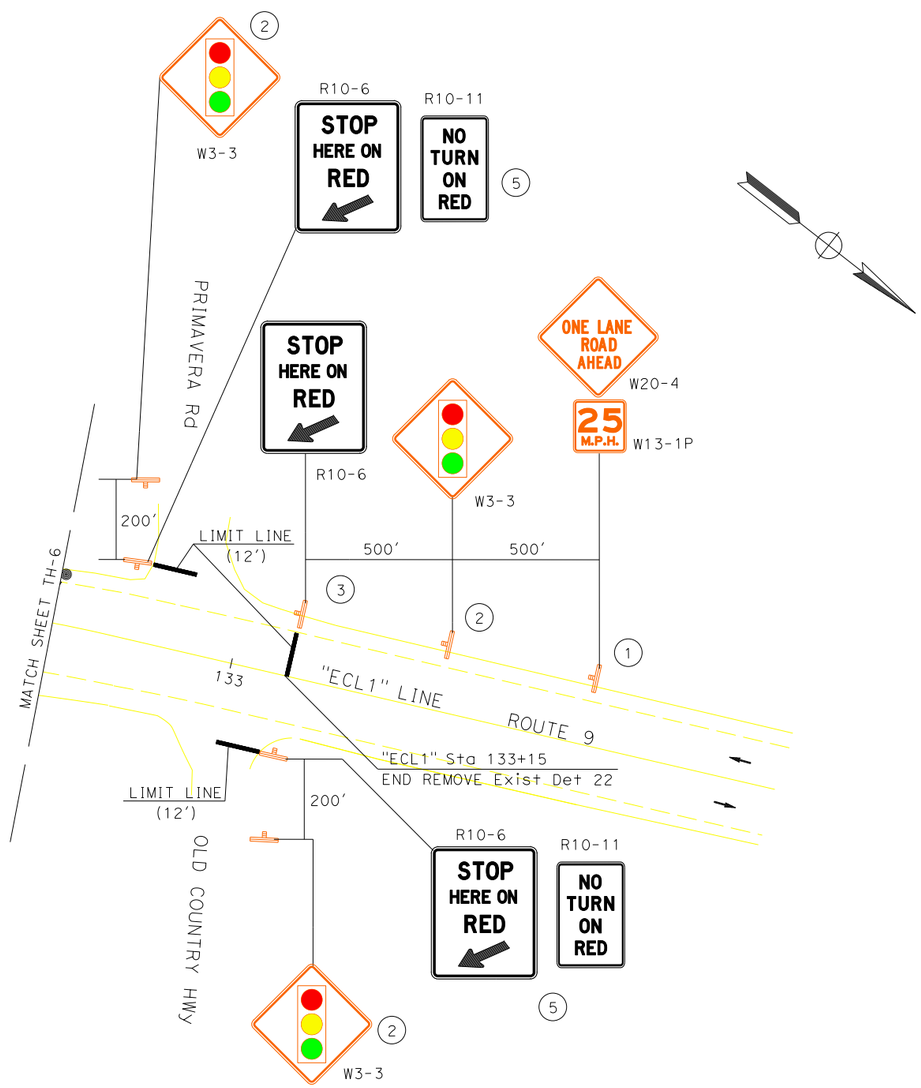

TRAFFIC HANDLING PLAN

STAGE 1

TH-7

NO SCALE

REVISED BY	DATE REVISED
TAM LA	APURVA GOKAL
CALCULATED-DESIGNED BY	CHECKED BY
FUNCTIONAL SUPERVISOR	MOHAMMED OATAMI

STATE OF CALIFORNIA - DEPARTMENT OF TRANSPORTATION

Caltrans

TRAFFIC DESIGN

LAST REVISION 11-04-21

DATE PLOTTED => $DATE
TIME PLOTTED => $TIME

BORDER LAST REVISED 7/2/2010

USERNAME => $USER
DGN FILE => $REQUEST

RELATIVE BORDER SCALE IS IN INCHES 0 1 2 3

UNIT 1513

PROJECT NUMBER & PHASE 05160000781

DocuSign Envelope ID: EF8475C0-0470-4E52-B5B5-25D92AE11799

Dist	COUNTY	ROUTE	POST MILES TOTAL PROJECT	SHEET No.	TOTAL SHEETS
05	SCr	9	13.6, 15.5		XX

REGISTERED CIVIL ENGINEER DATE

PLANS APPROVAL DATE

REGISTERED PROFESSIONAL ENGINEER No. Exp. CIVIL STATE OF CALIFORNIA

THE STATE OF CALIFORNIA OR ITS OFFICERS OR AGENTS SHALL NOT BE RESPONSIBLE FOR THE ACCURACY OR COMPLETENESS OF SCANNED COPIES OF THIS PLAN SHEET.

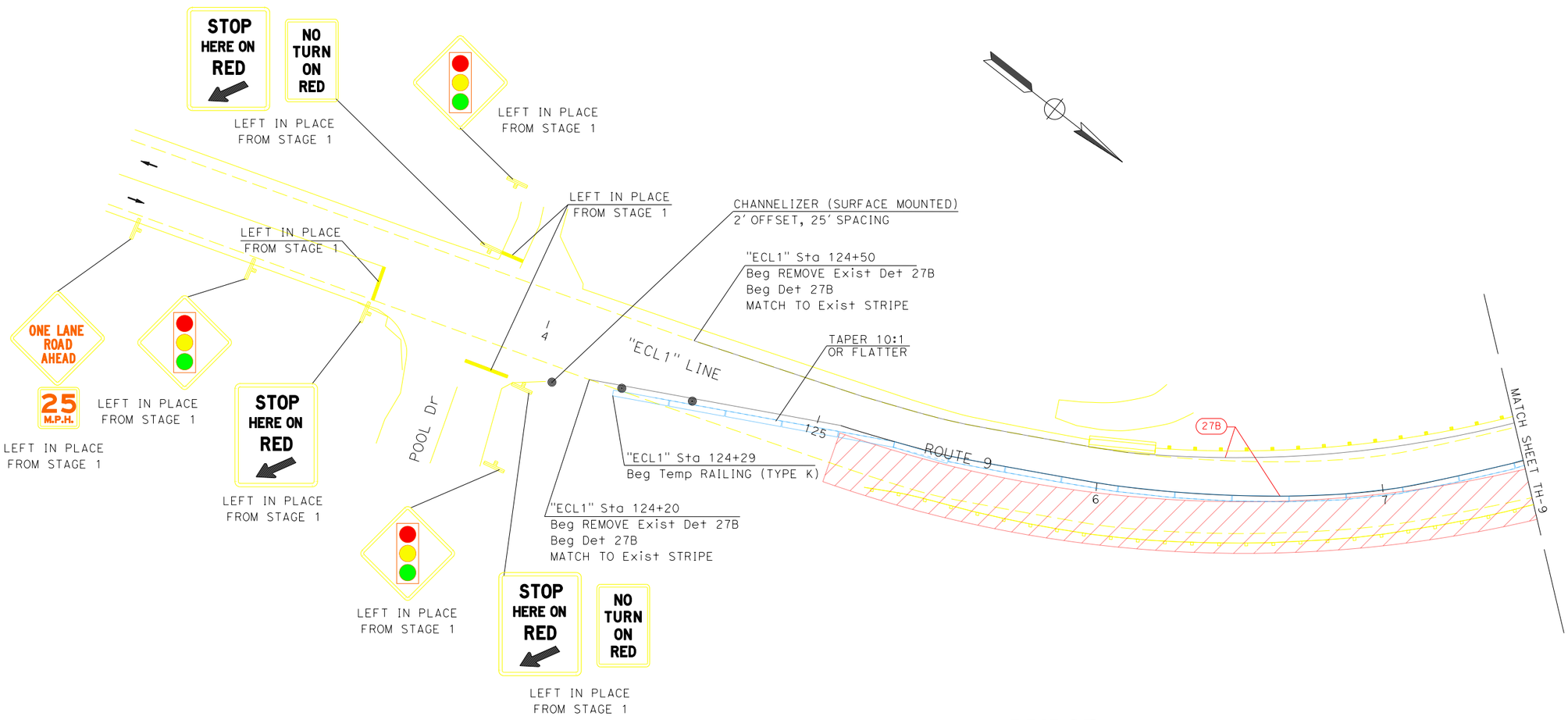

KINGS CREEK BRIDGE
Br No. 36-0054 PM 15.5

TRAFFIC HANDLING PLAN
STAGE 2 **TH-8**

NO SCALE

STATE OF CALIFORNIA - DEPARTMENT OF TRANSPORTATION
TRAFFIC DESIGN
Caltrans®

FUNCTIONAL SUPERVISOR: MOHAMMED QATAMI
CALCULATED-DESIGNED BY: TAM LA
CHECKED BY: APURVA GOKAL
REVISED BY
DATE REVISED

LAST REVISION 11-04-21
DATE PLOTTED => $DATE
TIME PLOTTED => $TIME

BORDER LAST REVISED 7/2/2010 | USERNAME => $USER | DGN FILE => $REQUEST | RELATIVE BORDER SCALE IS IN INCHES 0 1 2 3 | UNIT 1513 | PROJECT NUMBER & PHASE 05160000781

DocuSign Envelope ID: EF8475C0-0470-4E52-B5B5-25D92AE11799

Dist	COUNTY	ROUTE	POST MILES TOTAL PROJECT	SHEET No.	TOTAL SHEETS
05	SCr	9	13.6, 15.5		XX

REGISTERED CIVIL ENGINEER DATE

PLANS APPROVAL DATE

REGISTERED PROFESSIONAL ENGINEER No. Exp. CIVIL STATE OF CALIFORNIA

THE STATE OF CALIFORNIA OR ITS OFFICERS OR AGENTS SHALL NOT BE RESPONSIBLE FOR THE ACCURACY OR COMPLETENESS OF SCANNED COPIES OF THIS PLAN SHEET.

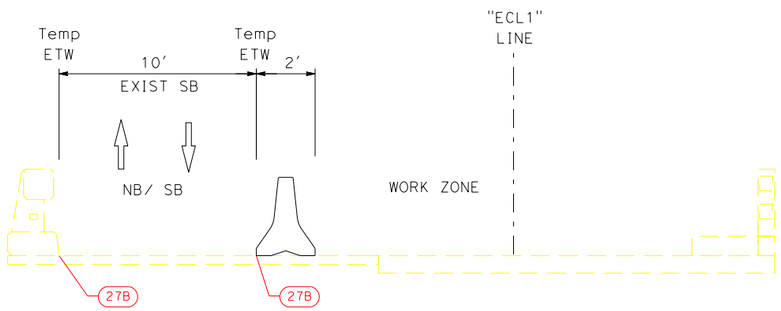

SECTION D-D

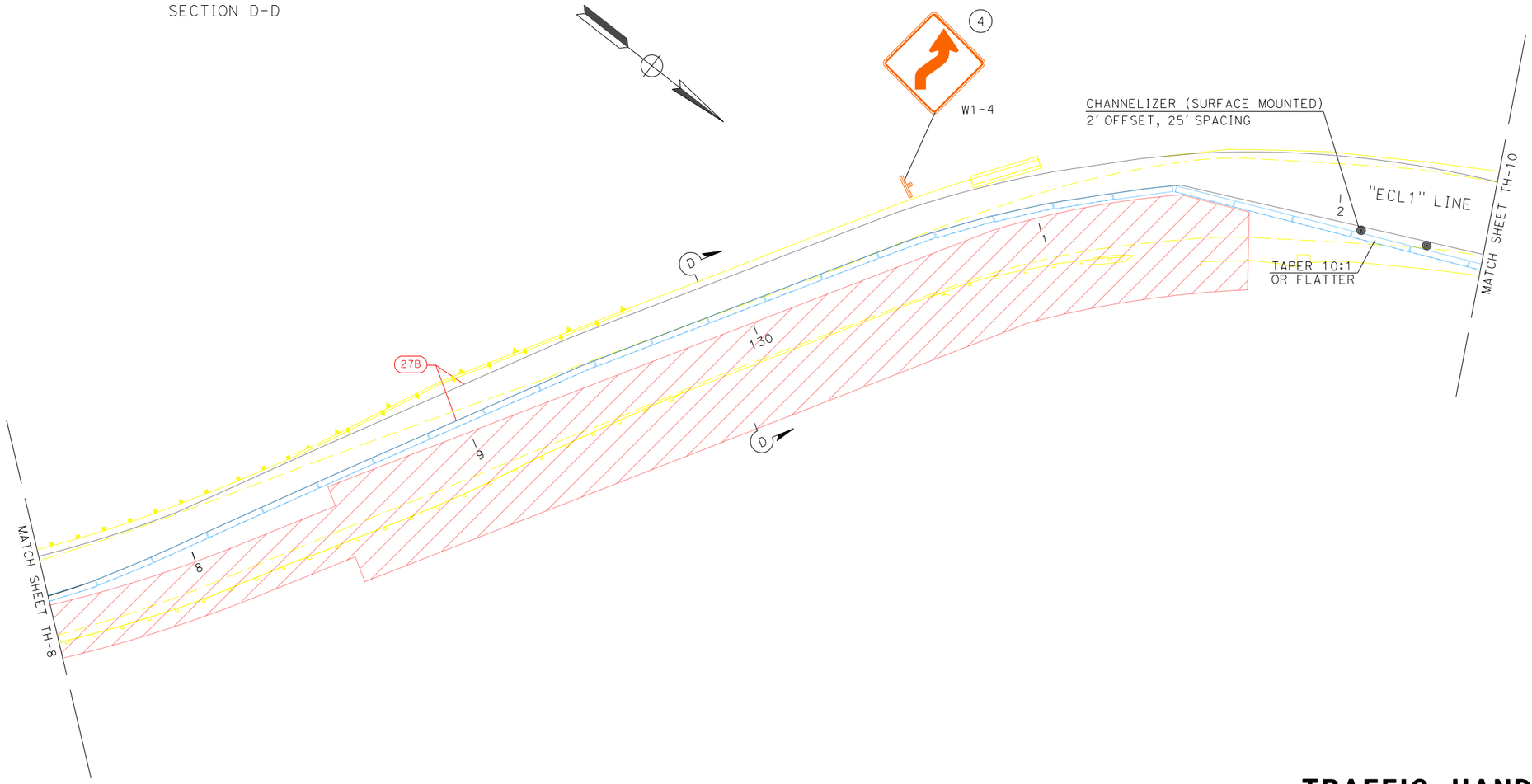

TRAFFIC HANDLING PLAN

STAGE 2 **TH-9**

NO SCALE

STATE OF CALIFORNIA - DEPARTMENT OF TRANSPORTATION

Caltrans®

TRAFFIC DESIGN

FUNCTIONAL SUPERVISOR: MOHAMMED OATAMI

CALCULATED-DESIGNED BY: TAM LA

CHECKED BY: APURVA GOKAL

REVISED BY

DATE REVISED

LAST REVISION 11-04-21

DATE PLOTTED => $DATE

TIME PLOTTED => $TIME

DocuSign Envelope ID: EF8475C0-0470-4E52-B5B5-25D92AE11799

Dist	COUNTY	ROUTE	POST MILES TOTAL PROJECT	SHEET No.	TOTAL SHEETS
05	SCr	9	13.6, 15.5		XX

REGISTERED CIVIL ENGINEER DATE

PLANS APPROVAL DATE

REGISTERED PROFESSIONAL ENGINEER No. Exp. CIVIL STATE OF CALIFORNIA

THE STATE OF CALIFORNIA OR ITS OFFICERS OR AGENTS SHALL NOT BE RESPONSIBLE FOR THE ACCURACY OR COMPLETENESS OF SCANNED COPIES OF THIS PLAN SHEET.

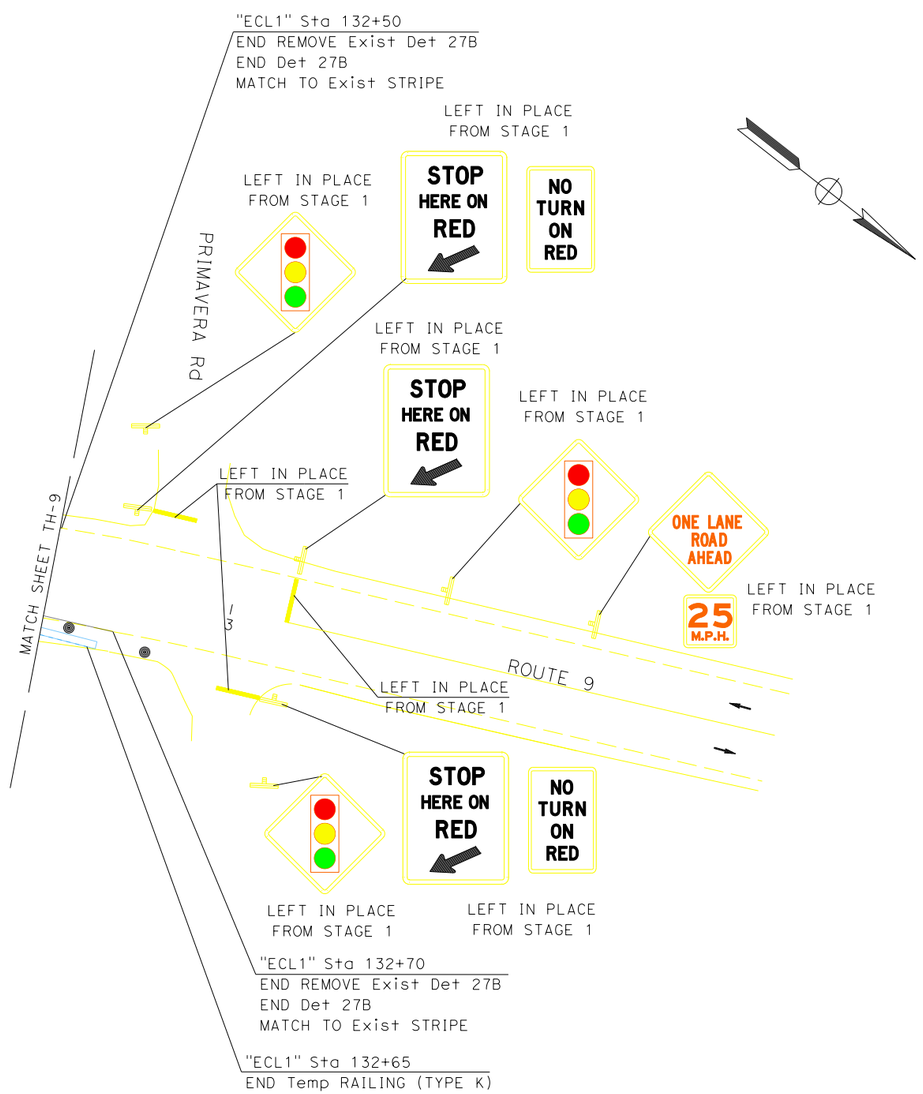

TRAFFIC HANDLING PLAN

STAGE 2 **TH-10**

NO SCALE

STATE OF CALIFORNIA - DEPARTMENT OF TRANSPORTATION

Caltrans®

TRAFFIC DESIGN

FUNCTIONAL SUPERVISOR: MOHAMMED OATAMI

CALCULATED-DESIGNED BY: TAM LA

CHECKED BY: APURVA GOKAL

REVISED BY

DATE REVISED

LAST REVISION 11-04-21

DATE PLOTTED => $DATE

TIME PLOTTED => $TIME

DocuSign Envelope ID: EF8475C0-0470-4E52-B5B5-25D92AE11799

Dist	COUNTY	ROUTE	POST MILES TOTAL PROJECT	SHEET No.	TOTAL SHEETS
05	SCr	9	13.6, 15.5		??

REGISTERED CIVIL ENGINEER DATE

PLANS APPROVAL DATE

REGISTERED PROFESSIONAL ENGINEER No. Exp. CIVIL STATE OF CALIFORNIA

THE STATE OF CALIFORNIA OR ITS OFFICERS OR AGENTS SHALL NOT BE RESPONSIBLE FOR THE ACCURACY OR COMPLETENESS OF SCANNED COPIES OF THIS PLAN SHEET.

STATIONARY MOUNTED CONSTRUCTION AREA SIGNS

SIGN No.	SIGN DESIGNATION	PANEL SIZE	SIGN MESSAGE	No. OF POSTS AND SIZE	No. OF SIGNS
1	W20-4	36" X 36"	ONE LANE ROAD AHEAD	1 - 4" x 6"	4
	W13-1P	30" X 30"	25 MPH		
2	W3-3	36" X 36"	SIGNAL SYMBOL	1 - 4" x 4"	9
3	R10-6	24" X 36"	STOP HERE ON RED W/ ARROW	1 - 4" x 4"	4
4	W1-4(R+)	36" X 36"	REVERSE RIGHT CURVE	1 - 4" x 4"	4
5	R10-6	24" x 36"	STOP HERE ON RED W/ ARROW	1 - 4" x 6"	5
	R10-11	24" x 30"	NO TURN ON RED		

EXACT SIGN LOCATIONS TO BE DETERMINED BY THE ENGINEER.
FOR ADDITIONAL CONSTRUCTION AREA SIGNS ARE SHOWN ON CS-1 SHEET.

ALTERNATIVE TEMPORARY CRASH CUSHION

SHEET No.	EA
TH-4	1
TOTAL	1

TEMPORARY RAILING (TYPE K)

SHEET No.	DIRECTION	STATION	LF
TH-1 TO TH-2	SB	"A1" Sta 28+10 TO 34+26	620
TH-3 TO TH-4	NB	"A1" Sta 27+83 TO 34+19	640
	SB	"A1" Sta 31+95 TO 33+75	180
TH-5 TO TH-6	SB	"ECL1" Sta 124+90 TO 132+47	760
TH-8 TO TH-10	NB	"ECL1" Sta 124+29 TO 132+70	840
TOTAL			3040

TEMPORARY PAVEMENT DELINEATION QUANTITIES

SHEET No.	LOCATION (STATION) FROM	LOCATION (STATION) TO	DIRECTION	DETAIL No.	TEMPORARY TRAFFIC STRIPE (PAINT) 6" WHITE LF	REMOVE THERMOPLASTIC TRAFFIC STRIPE LF	REMOVE PAVEMENT MARKER EA	TEMPORARY PAVEMENT MARKING (PAINT) DESCRIPTION	TEMPORARY PAVEMENT MARKING (PAINT) SQFT
TH-1 TO TH-4	"A1" 27+35	35+00	CL	22		1530	66		
	"A1" 28+00	34+50	SB	27B	650				
	"A1" 28+00	35+00	SB	27B	700	700			
	"A1" 27+75	34+25	NB	27B	650	650			
	"A1" 27+35		NB					LIMIT LINE	12
	"A1" 35+00		SB					LIMIT LINE	12
	RIVERDALE BLVD / SB 9							LIMIT LINE	25
TH-5 TO TH-10	"ECL1"123+40	133+15	CL	22		1950	84		
	"ECL1"124+90	132+50	SB	27B	760				
	"ECL1"125+00	132+70	NB	27B	860	860			
	"ECL1"124+50	132+50	SB	27B	800	800			
	"ECL1"123+40		NB					LIMIT LINE	12
	"ECL1"133+15		SB					LIMIT LINE	12
	DRIVEWAY / SB 9							LIMIT LINE	10
	POOL DR / NB 9							LIMIT LINE	15
	OLD COUNTRY HWY							LIMIT LINE	12
	PRIMAVERA RD							LIMIT LINE	12
TOTAL					4420	6490	150		122

CHANNELIZER (SURFACE MOUNTED)

SHEET No.	EA
TH-1 TO TH-2	7
TH-3 TO TH-4	8
TH-5 TO TH-7	8
TH-8 TO TH-10	7
TOTAL	30

TRAFFIC HANDLING QUANTITIES THQ-1

REVISED BY	DATE REVISED
TAM LA	A.N. GOKAL
CALCULATED-DESIGNED BY	CHECKED BY
FUNCTIONAL SUPERVISOR	MOHAMMED OATAMI

STATE OF CALIFORNIA - DEPARTMENT OF TRANSPORTATION
Caltrans® TRAFFIC DESIGN

LAST REVISION 11-04-21 | DATE PLOTTED => $DATE | TIME PLOTTED => $TIME

DocuSign Envelope ID: EF8475C0-0470-4E52-B5B5-25D92AE11799

Dist	COUNTY	ROUTE	POST MILES TOTAL PROJECT	SHEET No.	TOTAL SHEETS
05	SCr	9	13.6, 15.5		XX

REGISTERED CIVIL ENGINEER DATE

PLANS APPROVAL DATE

REGISTERED PROFESSIONAL ENGINEER No. Exp. CIVIL STATE OF CALIFORNIA

THE STATE OF CALIFORNIA OR ITS OFFICERS OR AGENTS SHALL NOT BE RESPONSIBLE FOR THE ACCURACY OR COMPLETENESS OF SCANNED COPIES OF THIS PLAN SHEET.

LEGEND:

- REMOVE ROADSIGN SIGN
- X-X ROADSIGN SIGN NUMBER

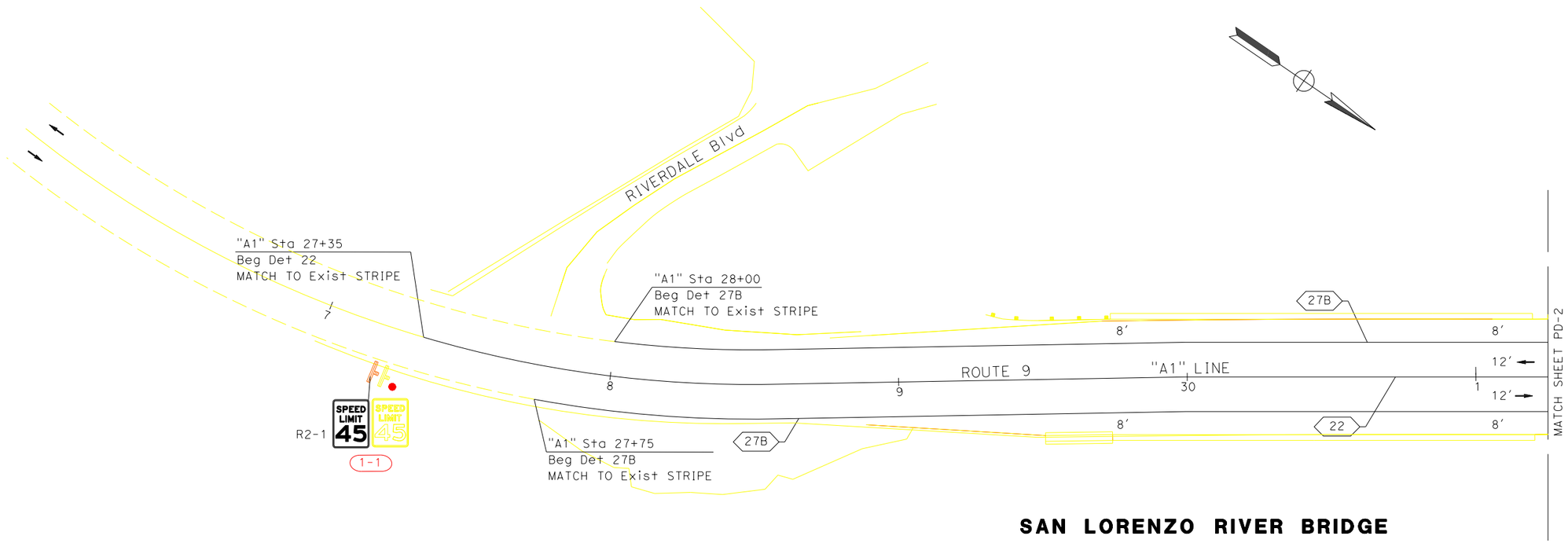

SAN LORENZO RIVER BRIDGE
PM 13.6

PAVEMENT DELINEATION AND SIGN PLAN
PD-1

APPROVED FOR PAVEMENT DELINEATION AND SIGN WORK ONLY

NO SCALE

STATE OF CALIFORNIA - DEPARTMENT OF TRANSPORTATION
Caltrans®
TRAFFIC DESIGN

FUNCTIONAL SUPERVISOR: MOHAMMED OATAMI
CALCULATED-DESIGNED BY / CHECKED BY
TAM LA / APURVA GOKAL
REVISED BY / DATE REVISED

LAST REVISION 11-04-21
DATE PLOTTED => $DATE
TIME PLOTTED => $TIME

BORDER LAST REVISED 7/2/2010 | USERNAME => $USER | DGN FILE => $REQUEST | RELATIVE BORDER SCALE IS IN INCHES 0 1 2 3 | UNIT 1513 | PROJECT NUMBER & PHASE 05160000781

DocuSign Envelope ID: EF8475C0-0470-4E52-B5B5-25D92AE11799

Dist	COUNTY	ROUTE	POST MILES TOTAL PROJECT	SHEET No.	TOTAL SHEETS
05	SCr	9	13.6, 15.5		XX

REGISTERED CIVIL ENGINEER DATE

PLANS APPROVAL DATE

REGISTERED PROFESSIONAL ENGINEER No. Exp. CIVIL STATE OF CALIFORNIA

THE STATE OF CALIFORNIA OR ITS OFFICERS OR AGENTS SHALL NOT BE RESPONSIBLE FOR THE ACCURACY OR COMPLETENESS OF SCANNED COPIES OF THIS PLAN SHEET.

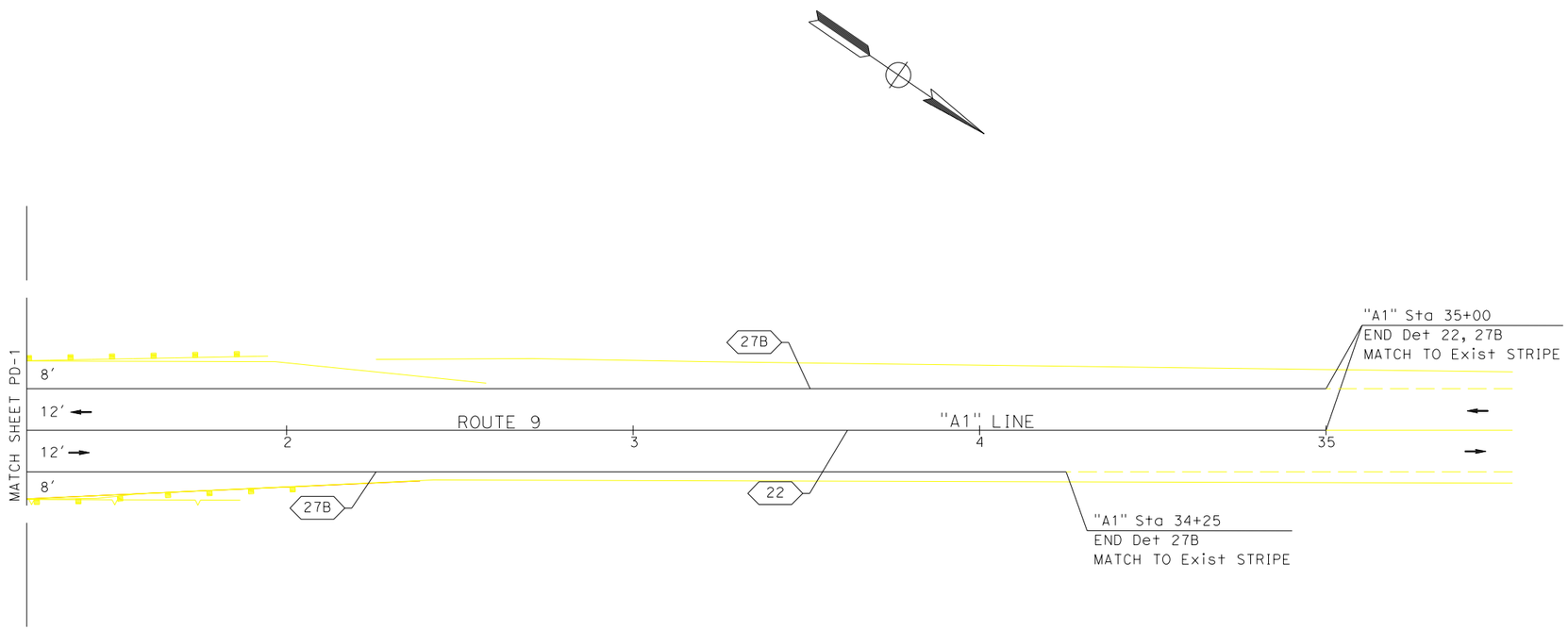

PAVEMENT DELINEATION AND SIGN PLAN PD-2

APPROVED FOR PAVEMENT DELINEATION AND SIGN WORK ONLY

NO SCALE

REVISED BY	DATE REVISED

CALCULATED-DESIGNED BY	TAM LA
CHECKED BY	APURVA GOKAL

FUNCTIONAL SUPERVISOR: MOHAMMED QATAMI

STATE OF CALIFORNIA - DEPARTMENT OF TRANSPORTATION

Caltrans®

TRAFFIC DESIGN

LAST REVISION 11-04-21 | DATE PLOTTED => $DATE | TIME PLOTTED => $TIME

BORDER LAST REVISED 7/2/2010 | USERNAME => $USER | DGN FILE => $REQUEST | RELATIVE BORDER SCALE IS IN INCHES 0 1 2 3 | UNIT 1513 | PROJECT NUMBER & PHASE 05160000781

DocuSign Envelope ID: EF8475C0-0470-4E52-B5B5-25D92AE11799

Dist	COUNTY	ROUTE	POST MILES TOTAL PROJECT	SHEET No.	TOTAL SHEETS
05	SCr	9	13.6, 15.5		XX

REGISTERED CIVIL ENGINEER DATE

PLANS APPROVAL DATE

REGISTERED PROFESSIONAL ENGINEER No. Exp. CIVIL STATE OF CALIFORNIA

THE STATE OF CALIFORNIA OR ITS OFFICERS OR AGENTS SHALL NOT BE RESPONSIBLE FOR THE ACCURACY OR COMPLETENESS OF SCANNED COPIES OF THIS PLAN SHEET.

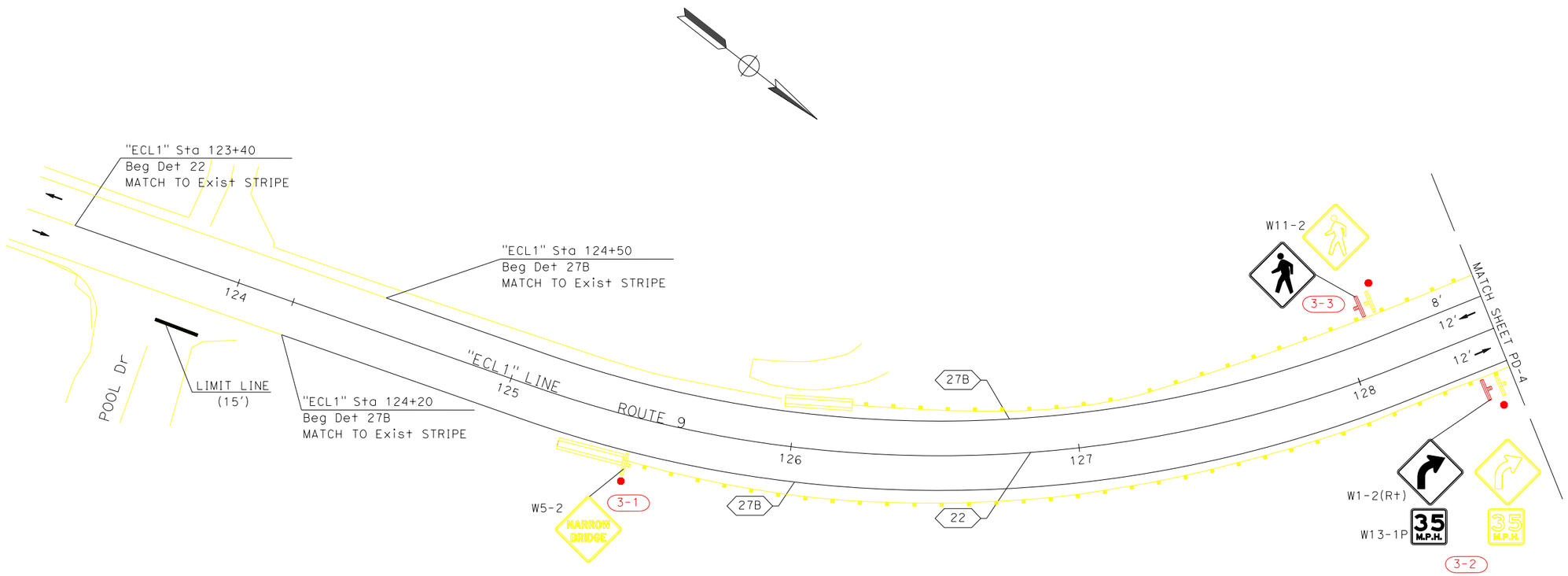

KINGS CREEK BRIDGE
Br No. 36-0054 PM 15.5

PAVEMENT DELINEATION AND SIGN PLAN
PD-3

APPROVED FOR PAVEMENT DELINEATION AND SIGNG WORK ONLY

NO SCALE

REVISED BY	DATE REVISED

CALCULATED-DESIGNED BY	TAM LA
CHECKED BY	APURVA GOKAL

FUNCTIONAL SUPERVISOR	MOHAMMED OATAMI

STATE OF CALIFORNIA - DEPARTMENT OF TRANSPORTATION
Caltrans
TRAFFIC DESIGN

LAST REVISION 11-04-21
DATE PLOTTED => $DATE
TIME PLOTTED => $TIME

DocuSign Envelope ID: EF8475C0-0470-4E52-B5B5-25D92AE11799

Dist	COUNTY	ROUTE	POST MILES TOTAL PROJECT	SHEET No.	TOTAL SHEETS
05	SCr	9	13.6, 15.5		XX

REGISTERED CIVIL ENGINEER DATE

PLANS APPROVAL DATE

REGISTERED PROFESSIONAL ENGINEER No. Exp. CIVIL STATE OF CALIFORNIA

THE STATE OF CALIFORNIA OR ITS OFFICERS OR AGENTS SHALL NOT BE RESPONSIBLE FOR THE ACCURACY OR COMPLETENESS OF SCANNED COPIES OF THIS PLAN SHEET.

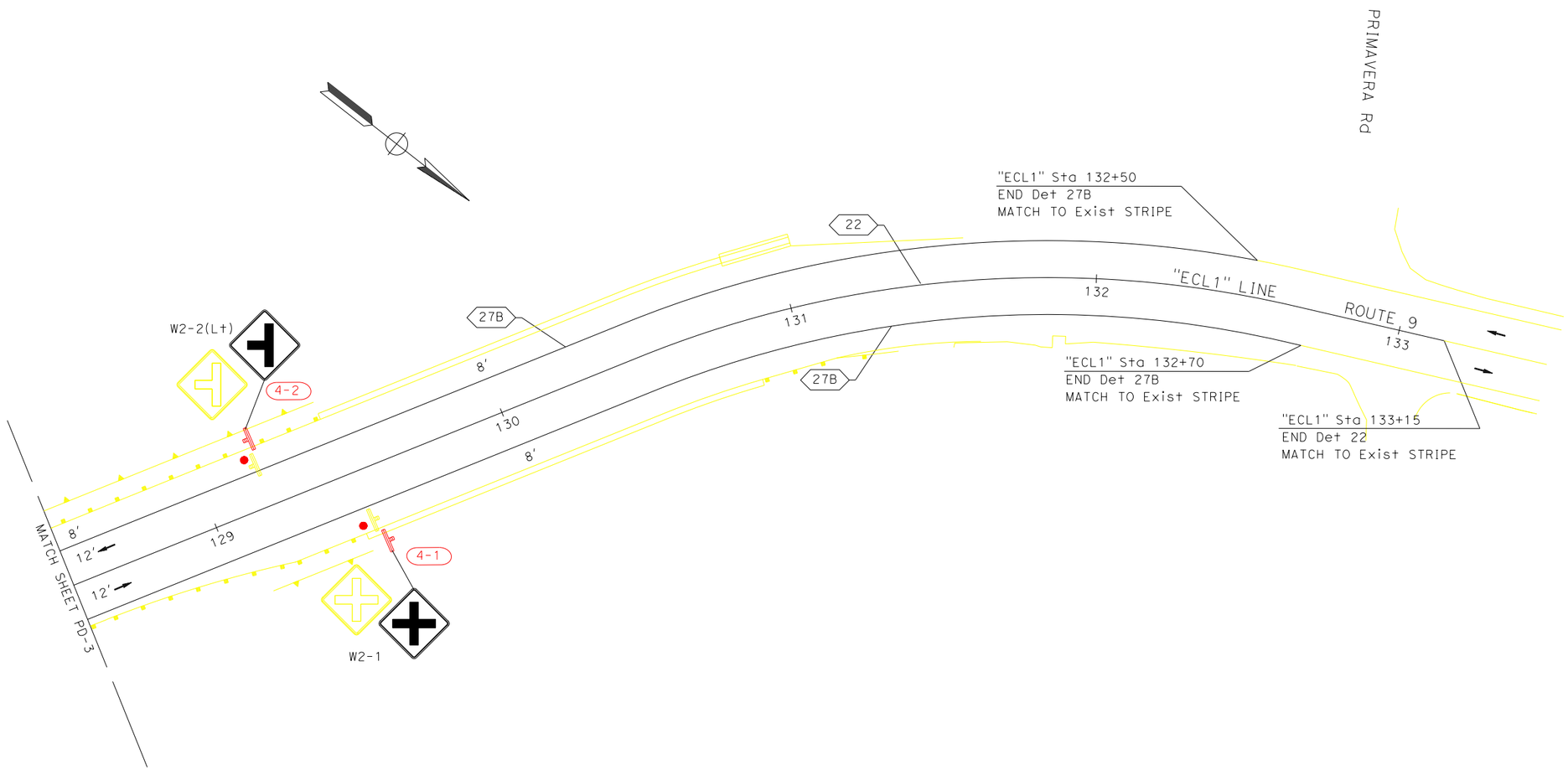

PAVEMENT DELINEATION AND SIGN PLAN
PD-4

APPROVED FOR PAVEMENT DELINEATION AND SIGN WORK ONLY

NO SCALE

STATE OF CALIFORNIA - DEPARTMENT OF TRANSPORTATION
Caltrans®
TRAFFIC DESIGN

FUNCTIONAL SUPERVISOR: MOHAMMED QATAMI

CALCULATED-DESIGNED BY: TAM LA
CHECKED BY: APURVA GOKAL

REVISED BY
DATE REVISED

LAST REVISION 11-04-21
DATE PLOTTED => $DATE
TIME PLOTTED => $TIME

BORDER LAST REVISED 7/2/2010
USERNAME => $USER
DGN FILE => $REQUEST
RELATIVE BORDER SCALE IS IN INCHES 0 1 2 3
UNIT 1513
PROJECT NUMBER & PHASE 05160000781

DocuSign Envelope ID: EF8475C0-0470-4E52-B5B5-25D92AE11799

Dist	COUNTY	ROUTE	POST MILES TOTAL PROJECT	SHEET No.	TOTAL SHEETS
05	SCr	9	13.6, 15.5		??

REGISTERED CIVIL ENGINEER DATE

xx-xx-xx
PLANS APPROVAL DATE

REGISTERED PROFESSIONAL ENGINEER No. Exp. CIVIL STATE OF CALIFORNIA

THE STATE OF CALIFORNIA OR ITS OFFICERS OR AGENTS SHALL NOT BE RESPONSIBLE FOR THE ACCURACY OR COMPLETENESS OF SCANNED COPIES OF THIS PLAN SHEET.

PAVEMENT DELINEATION QUANTITIES

LOCATION			DIRECTION	DETAIL No.	PAVEMENT MARKERS (RETROREFLECTIVE)	THERMOPLASTIC TRAFFIC STRIPE (ENHANCED WET NIGHT VISIBILITY)		THERMOPLASTIC PAVEMENT MARKING (ENHANCED WET NIGHT VISIBILITY)
POST MILE	STATION FROM	STATION TO			TYPE D	6" YELLOW	6" WHITE	
					EA	LF	LF	SQFT
13.6	"A1" 27+75	34+25	NB	27B			650	
	"A1" 27+35	35+00	CL	22	66	1530		
	"A1" 28+00	35+00	SB	27B			700	
15.5	"ECL1"124+20	132+70	NB	27B			850	
	"ECL1"123+40	133+15	CL	22	84	1950		
	"ECL1"124+50	132+50	SB	27B			800	
	POOL DR / NB 9							15
				SUBTOTAL	150	3480	3000	15
				TOTAL	150	6480		15

SIGN QUANTITIES

SIGN No. (X-X)	SIGN CODE	SIGN MESSAGE	No. OF POST AND SIZE	PANEL SIZE	BACKGROUND SHEETING COLOR	BACKGROUND RETROREFLECTIVITY ASTM TYPE	LEGEND SHEETING COLOR	LEGEND RETROREFLECTIVITY ASTM TYPE	FURNISH SINGLE SHEET ALUMINUM SIGN (0.063"-UNFRAMED)	ROADSIDE SIGN - ONE POST	REMOVE ROADSIDE SIGN (WOOD POST)	TREATED WOOD WASTE
									SQFT	EA	EA	LB
1-1	R2-1	SPEED LIMIT 45	1-4"x4"	24" x 30"	WHITE	IX	BLACK		5	1	1	38
3-1	W5-2	NARROW BRIDGE	EXIST								1	64
3-2	W1-2(R+)	RIGHT CURVE	1-4"x6"	30" x 30"	FY	XI	BLACK		6.25	1	1	64
	W13-1P	35 MPH		18" x 18"	FY	XI	BLACK		2.25			
3-3	W11-2	PEDESTRIAN TRAFFIC	1-4"x6"	30" x 30"	FY	XI	BLACK		6.25	1	1	64
4-1	W2-1	CROSS ROAD	1-4"x6"	30" x 30"	FY	XI	BLACK		6.25	1	1	64
4-2	W2-2(L+)	LEFT SIDE ROAD	1-4"x6"	30" x 30"	FY	XI	BLACK		6.25	1	1	64
								TOTAL	32.25	6	7	358

PAVEMENT DELINEATION AND SIGN QUANTITIES
PDQ-1

STATE OF CALIFORNIA - DEPARTMENT OF TRANSPORTATION
Caltrans®
TRAFFIC DESIGN

FUNCTIONAL SUPERVISOR: MOHAMMED QATAMI
CALCULATED-DESIGNED BY: TAM LA
CHECKED BY: A.N. GOKAL
REVISED BY
DATE REVISED

LAST REVISION 11-04-21
DATE PLOTTED => $DATE
TIME PLOTTED => $TIME

DocuSign Envelope ID: EF8475C0-0470-4E52-B5B5-25D92AE11799

Dist	COUNTY	ROUTE	POST MILES TOTAL PROJECT	SHEET No.	TOTAL SHEETS
05	SCr	9	13.6/15.5	53	XXX

REGISTERED CIVIL ENGINEER DATE

07-23-21

PLANS APPROVAL DATE

REGISTERED PROFESSIONAL ENGINEER No. Exp. CIVIL STATE OF CALIFORNIA

THE STATE OF CALIFORNIA OR ITS OFFICERS OR AGENTS SHALL NOT BE RESPONSIBLE FOR THE ACCURACY OR COMPLETENESS OF SCANNED COPIES OF THIS PLAN SHEET.

ROADWAY QUANTITIES

	FROM STATION	TO STATION	HOT MIX ASPHALT (TYPE A)	CLASS 2 AGGREGATE BASE	COLD PLANE AC PAVEMENT	TACK COAT	ROADWAY EXCAVATION	AC DIKE (TYPE A)	ROCK SLOPE PROTECTION (CLASS III, METHOD B)	ROCK SLOPE PROTECTION FABRIC (CLASS 8)
			TON	CY	SQYD	TON	CY	LF	CY	SF
"A1" LINE	28+51.00 Lt	29+45.00 Lt	5.64	7.31			10.10			
"A1" LINE	29+45.00 Lt	29+93.75 Lt	17.55	22.75			31.42			
"A1" LINE	31+00.00 Lt	31+95.02 Lt	34.21	44.34			61.24			
"A1" LINE	31+95.02 Lt	32+29.98 Lt	2.10	2.72			3.75			
"A1" LINE	32+29.98 Lt	32+57.00 Lt	8.92	11.56			15.96			
"A1" LINE	32+57.00 Lt	33+00.00 Lt	16.77	21.74			30.02			
"A1" LINE	33+00.00 Lt	33+28.76 Lt	3.45	4.47			6.18			
"A1" LINE	28+88.00 Rt	29+45.00 Rt	3.42	4.43			6.12			
"A1" LINE	29+45.00 Rt	29+93.75 Rt	17.55	22.75			31.42			
"A1" LINE	31+00.00 Rt	31+95.02 Rt	34.21	44.34			61.24			
"A1" LINE	31+95.02 Rt	32+29.98 Rt	2.10	2.72			3.75			
"A1" LINE	32+29.98 Rt	32+42.00 Rt	0.72	0.93			1.29			
"A1" LINE	28+00.00 Rt	28+51.00 Rt	29.07		107.67	0.05				
"A1" LINE	28+00.00 Lt	28+51.00 Lt	21.42		79.33	0.04				
"A1" LINE	28+51.00 Rt	28+88.00 Rt	21.09		78.11	0.04				
"A1" LINE	28+51.00 Lt	28+88.00 Lt	11.10		41.11	0.02				
"A1" LINE	28+88.00 Rt	29+08.00 Rt	9.00		33.33	0.02				
"A1" LINE	28+88.00 Lt	29+08.00 Lt	6.00		22.22	0.01				
"A1" LINE	29+08.00 Rt	29+45.00 Rt	11.10		41.11	0.02				
"A1" LINE	29+08.00 Lt	29+45.00 Lt	11.10		41.11	0.02				
"A1" LINE	31+95.02 Rt	32+29.98 Rt	10.49		38.84	0.02				
"A1" LINE	31+95.02 Lt	32+29.98 Lt	10.49		38.84	0.02				
"A1" LINE	32+29.98 Rt	32+42.00 Rt	3.61		13.36	0.01				
"A1" LINE	32+29.98 Lt	32+42.00 Lt	0.36		1.34	0.00				
"A1" LINE	32+42.00 Rt	33+00.00 Rt	24.36		90.22	0.04				
"A1" LINE	32+42.00 Lt	33+00.00 Lt	1.74		6.44	0.00				
"A1" LINE	33+00.00 Rt	33+28.76 Rt	12.08		44.74	0.02				
"A1" LINE	33+00.00 Lt	33+28.76 Lt	8.63		31.96	0.01				
BUS PAD "A1" LINE 31+90.90 Lt			92.62	120.06						
San Lorenzo Taper Areas			89.40	115.89			160.04			
"ECL1" LINE	126+55.00 Lt	128+32.00 Lt	77.00	99.81			137.83			
"ECL1" LINE	128+32.00 Lt	129+64.50 Lt	47.70	61.83			85.39			
"ECL1" LINE	130+63.50 Lt	131+61.18 Lt	35.16	45.58			62.95			
"ECL1" LINE	131+61.18 Lt	132+19.00 Lt	25.15	32.60			45.02			
"ECL1" LINE	126+55.00 Rt	128+87.00 Rt	100.92	130.82			180.66			
"ECL1" LINE	128+87.00 Rt	129+64.50 Rt	27.90	36.17			49.94			
"ECL1" LINE	130+63.50 Rt	131+98.91 Rt	48.75	63.19			87.26			
"ECL1" LINE	131+98.91 Rt	132+19.00 Rt	8.74	11.33			15.64			
Kings Creek Taper Areas			71.29	92.41			127.62			
"ECL1" LINE	130+63.43 Rt	131+15.01 Rt	1.41					50.00		
"ECL1" LINE	128+85.00 Rt	129+25.00 Rt							6.00	160.00
		TOTAL:	964.29	999.77	709.74	0.33	1214.84	50.00	6.00	160.00

SURVEY MONUMENT

STATION	(TYPE D)
	NO
"A1" LINE 28+56.67 TO "A1" LINE 33+15.39	1
TOTAL	1

GUARDRAIL AND TBB

LOCATION (Rte 9)		MGS (STEEL POST)	ALTERNATIVE CRASH CUSHON	TRANSITION RAILING (TYPE WB-31)	REMOVE GUARDRAIL	TREATED WOOD WASTE
		LF	EA	EA	LF	LB
"A1" LINE 29+50.53 Rt	"A1" LINE 29+73.75 Rt		1			
"A1" LINE 31+95.00 Rt	"A1" LINE 32+18.16 Rt		1			
"A1" LINE 29+50.55 Lt	"A1" LINE 29+73.75 Lt		1			
"A1" LINE 31+20.00 Lt	"A1" LINE 31+43.19 Lt		1			
"ECL1" LINE 130+84.26 Rt	"ECL1" LINE 131+08.92 Rt		1			
"ECL1" LINE 124+99.41 Rt	"ECL1" LINE 125+22.20 Rt		1			
"ECL1" LINE 125+95.99 Lt	"ECL1" LINE 126+20.11 Lt		1			
"ECL1" LINE 130+82.83 Lt	"ECL1" LINE 131+04.71 Lt		1			
"A1" LINE 29+33.30 Lt	"A1" LINE 29+98.80 Lt				67.0	1063.9
"A1" LINE 30+96.24 Lt	"A1" LINE 31+61.17 Lt				66.0	1063.9
"A1" LINE 29+33.64 Rt	"A1" LINE 29+98.69 Rt				66.0	1063.9
"A1" LINE 30+96.46 Rt	"A1" LINE 31+36.78 Rt				41.0	709.3
"ECL1" LINE 125+22.92 Rt	"ECL1" LINE 129+70.54 Rt				448.0	6472.2
"ECL1" LINE 130+58.07 Rt	"ECL1" LINE 131+25.83 Rt				68.0	1063.9
"ECL1" LINE 126+20.78 Lt	"ECL1" LINE 129+67.97 Lt				350.16	5053.6
"ECL1" LINE 130+60.49 Lt	"ECL1" LINE 131+46.60 Lt				91.0	1418.6
"ECL1" LINE 128+35.75 Rt	"ECL1" LINE 128+60.75 Rt			1		
"ECL1" LINE 128+18.33 Lt	"ECL1" LINE 128+43.28 Lt			1		
"ECL1" LINE 125+22.20 Rt	"ECL1" LINE 128+35.75 Rt	192				
"ECL1" LINE 131+10.86 Rt	"ECL1" LINE 131+25.41 Rt	324				
TOTAL		516	8	2	1194.86	17909.3

SUMMARY OF QUANTITIES

Q-1

REVISED BY	DATE REVISED

CALCULATED-DESIGNED BY	CHECKED BY

FUNCTIONAL SUPERVISOR

STATE OF CALIFORNIA - DEPARTMENT OF TRANSPORTATION

Caltrans 06-DESIGN DIVISION

LAST REVISION 07-23-21 | DATE PLOTTED => 12/7/2021 TIME PLOTTED => 10:30:55 AM

DocuSign Envelope ID: EF8475C0-0470-4E52-B5B5-25D92AE11799

Dist	COUNTY	ROUTE	POST MILES TOTAL PROJECT	SHEET No.	TOTAL SHEETS
05	SCr	9	13.6/15.5		

LICENSED LANDSCAPE ARCHITECT

PLANS APPROVAL DATE

LICENSED LANDSCAPE ARCHITECT Chelsea K Moore No. 6589 Signature 1-31-22 Renewal Date xx-xx-xx Date STATE OF CALIFORNIA

THE STATE OF CALIFORNIA OR ITS OFFICERS OR AGENTS SHALL NOT BE RESPONSIBLE FOR THE ACCURACY OR COMPLETENESS OF SCANNED COPIES OF THIS PLAN SHEET.

NOTE:

STATIONS AND OFFSETS SHOWN ARE APPROXIMATE.

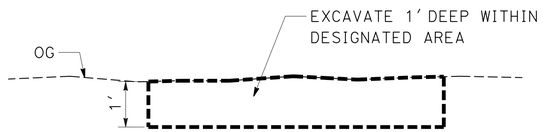

TYPICAL SECTION

ROADWAY EXCAVATION (SELECTED MATERIAL TOPSOIL)

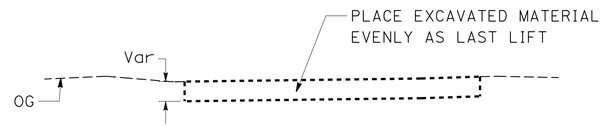

TYPICAL SECTION

BACKFILL (SELECTED MATERIAL TOPSOIL)

LEGEND:

- ROADWAY EXCAVATION SELECTED MATERIAL TOPSOIL (HYDRIC SOIL)
- BACKFILL SELECTED MATERIAL TOPSOIL (HYDRIC SOIL)
- Exist TREE

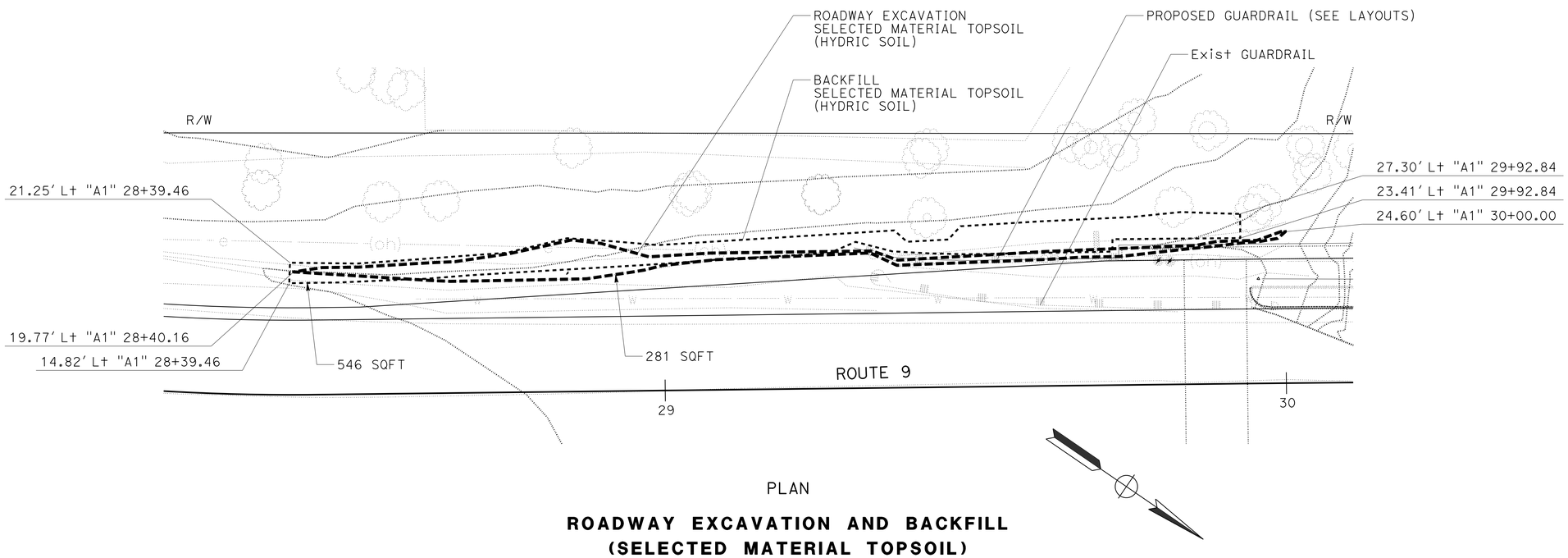

PLAN

ROADWAY EXCAVATION AND BACKFILL (SELECTED MATERIAL TOPSOIL) HYDRIC SOIL AT WETLAND

CONSTRUCTION DETAILS

NO SCALE

C-X

STATE OF CALIFORNIA - DEPARTMENT OF TRANSPORTATION

Caltrans® LANDSCAPE ARCHITECTURE

SENIOR LANDSCAPE ARCHITECT: CORBY KILMER

CALCULATED-DESIGNED BY: CHELSEA MOORE

CHECKED BY: PKB

REVISED BY: CKM

DATE REVISED: 10-29-21

LAST REVISION 00-00-00

DATE PLOTTED => 1-NOV-2021

TIME PLOTTED => 11:05

DocuSign Envelope ID: EF8475C0-0470-4E52-B5B5-25D92AE11799

REMOVE TREES (CLEARING AND GRUBBING)

Dist	COUNTY	ROUTE	POST MILES TOTAL PROJECT	SHEET No.	TOTAL SHEETS
05	SCr	9	13.6/15.5		

LICENSED LANDSCAPE ARCHITECT

PLANS APPROVAL DATE

LICENSED LANDSCAPE ARCHITECT Chelsea K Moore No. 6599 Signature 1-31-22 Renewal Date xx-xx-xx Date STATE OF CALIFORNIA

THE STATE OF CALIFORNIA OR ITS OFFICERS OR AGENTS SHALL NOT BE RESPONSIBLE FOR THE ACCURACY OR COMPLETENESS OF SCANNED COPIES OF THIS PLAN SHEET.

NOTE:

FOR ACCURATE RIGHT OF WAY DATA, CONTACT RIGHT OF WAY ENGINEERING AT THE DISTRICT OFFICE.

SURVEY POINT NUMBER	TYPE	Approx DBH
3	REDWOOD	43"
4	ALDER	13"
9	TAN OAK	7"
12	OTHER	10"
22	MAPLE	4"
36	REDWOOD	13"
41	TAN OAK	7"
43	MAPLE	8"
57	FIR	4"
2761	MAPLE	11"
2762	MAPLE	10"
2763	MAPLE	10"
2764	MAPLE	10"
2765	BAY	8"
2766	BAY	11"
3146	REDWOOD	14"
3147	REDWOOD	6"
3148	REDWOOD	7"
6053	REDWOOD	24"
6055	REDWOOD	18"
6056	REDWOOD	24"

LEGEND:

X #22 EXISTING TREE TO BE REMOVED

EXISTING TREE

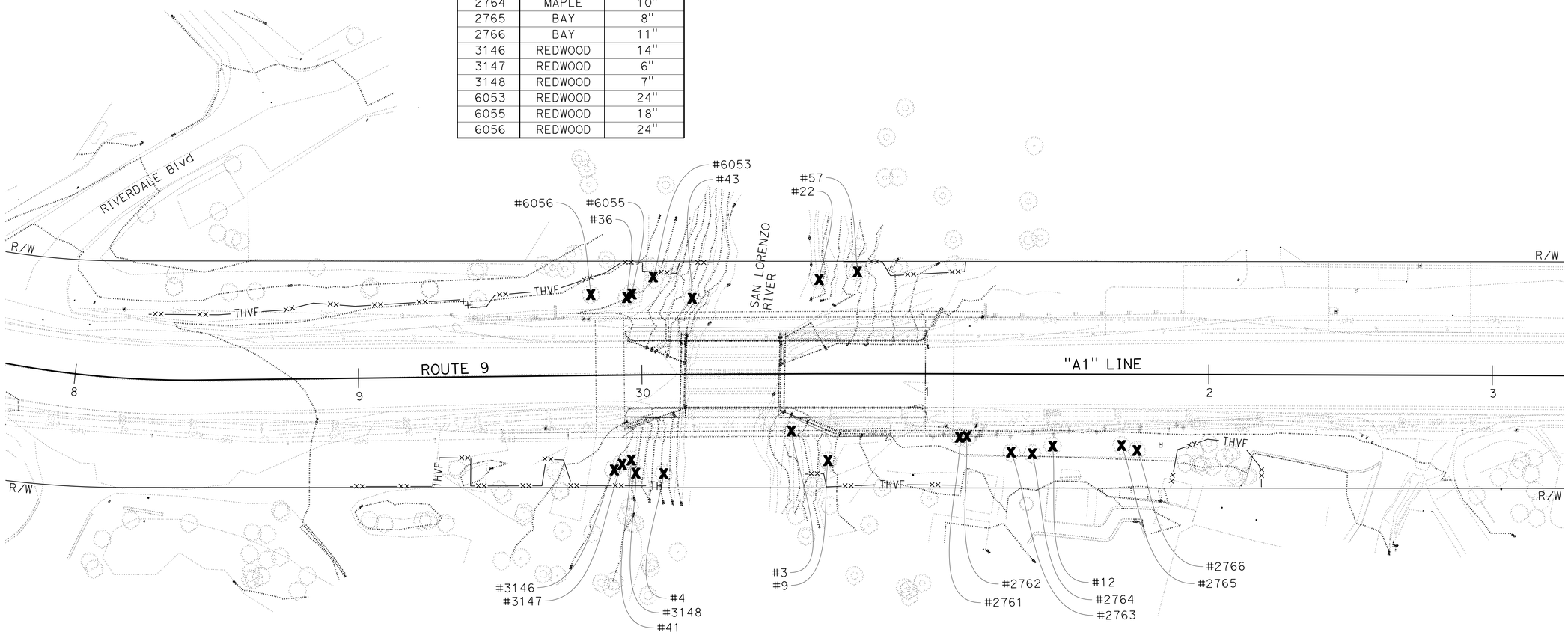

SAN LORENZO RIVER BRIDGE
PM 13.6

APPROVED FOR TREE REMOVAL WORK ONLY

TREE REMOVAL PLAN

SCALE: 1"=20'

PR-1

STATE OF CALIFORNIA - DEPARTMENT OF TRANSPORTATION

Caltrans LANDSCAPE ARCHITECTURE

SENIOR LANDSCAPE ARCHITECT CORBY KILMER

CALCULATED-DESIGNED BY CHELSEA MOORE

CHECKED BY PKB

REVISED BY CKM

DATE REVISED 10-29-21

LAST REVISION 00-00-00

DATE PLOTTED => 1-NOV-2021

TIME PLOTTED => 11:10

DocuSign Envelope ID: EF8475C0-0470-4E52-B5B5-25D92AE11799

Dist	COUNTY	ROUTE	POST MILES TOTAL PROJECT	SHEET No.	TOTAL SHEETS
05	SCr	9	13.6/15.5		

LICENSED LANDSCAPE ARCHITECT

PLANS APPROVAL DATE

LICENSED LANDSCAPE ARCHITECT Chelsea K Moore No. 6599 Signature 1-31-22 Renewal Date xx-xx-xx Date STATE OF CALIFORNIA

THE STATE OF CALIFORNIA OR ITS OFFICERS OR AGENTS SHALL NOT BE RESPONSIBLE FOR THE ACCURACY OR COMPLETENESS OF SCANNED COPIES OF THIS PLAN SHEET.

NOTE:

FOR ACCURATE RIGHT OF WAY DATA, CONTACT RIGHT OF WAY ENGINEERING AT THE DISTRICT OFFICE.

LEGEND:

X #22 — EXISTING TREE TO BE REMOVED

EXISTING TREE

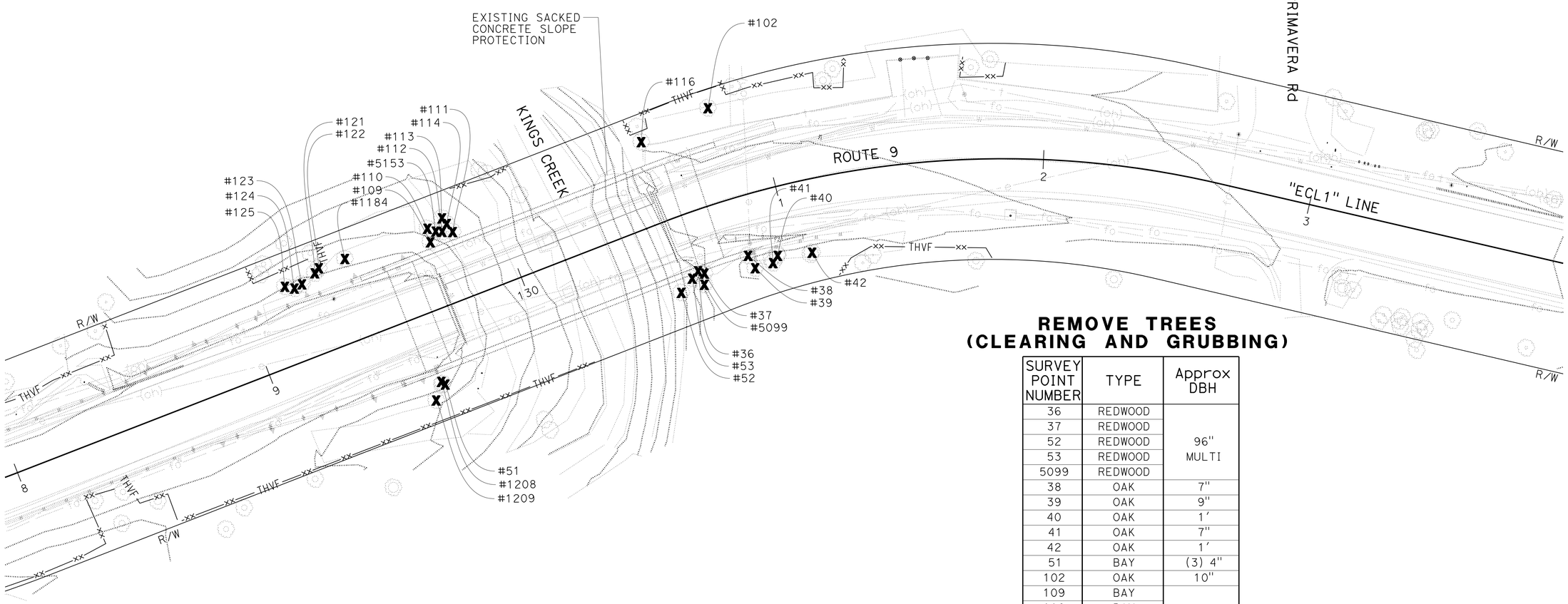

REMOVE TREES (CLEARING AND GRUBBING)

SURVEY POINT NUMBER	TYPE	Approx DBH
36	REDWOOD	
37	REDWOOD	
52	REDWOOD	96" MULTI
53	REDWOOD	
5099	REDWOOD	
38	OAK	7"
39	OAK	9"
40	OAK	1'
41	OAK	7"
42	OAK	1'
51	BAY	(3) 4"
102	OAK	10"
109	BAY	
110	BAY	
111	BAY	
112	BAY	96" MULTI
113	BAY	
114	BAY	
5153	BAY	
116	OAK	18"
121	REDWOOD	24"
122	REDWOOD	15"
123	REDWOOD	14"
124	REDWOOD	15"
125	REDWOOD	20"
1184	REDWOOD	
1208	OAK	30"
1209	FIR	19"

KINGS CREEK BRIDGE
PM 15.5

APPROVED FOR TREE REMOVAL WORK ONLY

TREE REMOVAL PLAN

SCALE: 1"=20' **PR-2**

REVISED BY	DATE REVISED
CKM	10-29-21

CALCULATED-DESIGNED BY: CHELSEA MOORE
CHECKED BY: PKB
SENIOR LANDSCAPE ARCHITECT: CORBY KILMER

STATE OF CALIFORNIA - DEPARTMENT OF TRANSPORTATION
Caltrans® LANDSCAPE ARCHITECTURE

LAST REVISION 00-00-00
DATE PLOTTED => 1-NOV-2021
TIME PLOTTED => 11:14

DocuSign Envelope ID: EF8475C0-0470-4E52-B5B5-25D92AE11799

Dist	COUNTY	ROUTE	POST MILES TOTAL PROJECT	SHEET No.	TOTAL SHEETS
05	SCr	9	13.6/15.5		

LICENSED LANDSCAPE ARCHITECT

PLANS APPROVAL DATE

LICENSED LANDSCAPE ARCHITECT Chelsea K Moore No. 6599 Signature 1-31-22 Renewal Date xx-xx-xx Date STATE OF CALIFORNIA

THE STATE OF CALIFORNIA OR ITS OFFICERS OR AGENTS SHALL NOT BE RESPONSIBLE FOR THE ACCURACY OR COMPLETENESS OF SCANNED COPIES OF THIS PLAN SHEET.

NOTES:

1. WOVEN WIRE CLOTH AND ROCK WITH VALVE BOX IS NOT REQUIRED.
2. VALVE BOX IDENTIFICATION IS NOT REQUIRED.

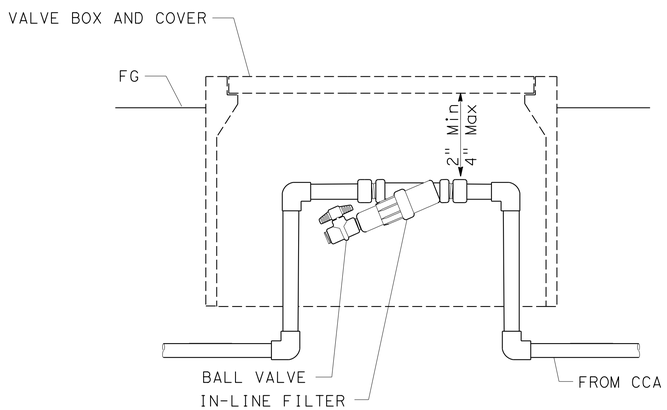

SECTION

DRIP IRRIGATION WYE FILTER

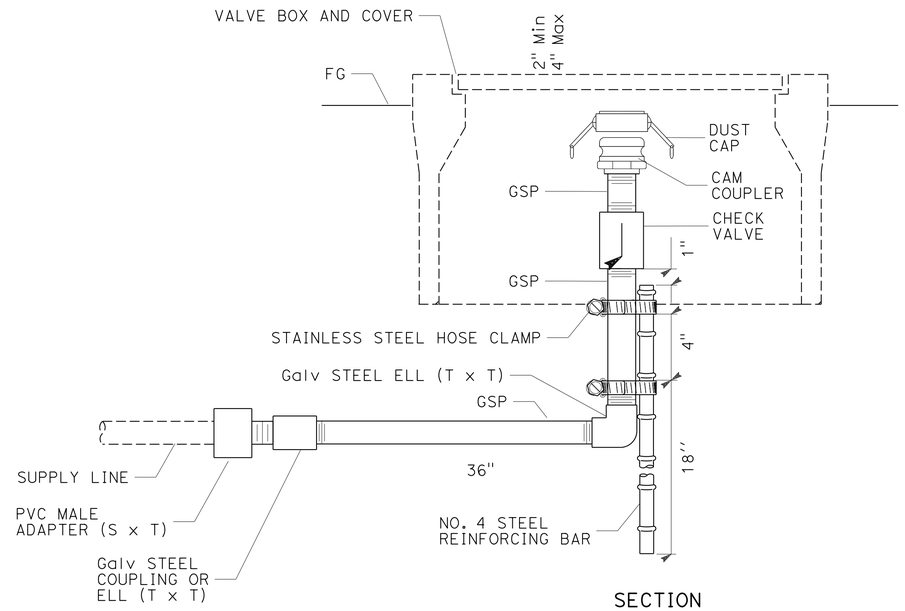

SECTION

CAM COUPLER ASSEMBLY

TEMPORARY IRRIGATION SYSTEM QUANTITIES

SHEET NUMBER	(N) CAM COUPLER ASSEMBLY	(N) DRIP IRRIGATION WYE FILTER	(N) PLASTIC PIPE (SCHEDULE 40) (SUPPLY LINE)	(N) DRIP IRRIGATION TUBING	(N) CHECK VALVE
	1½"	¾"	¾"	½"	
	EA	EA	LF	LF	EA
IP-1	2	2	357	365	2
IP-2	1	1	360	90	
IP-3	1	1	442	416	2
TOTAL	4	4	1,159	871	4

IRRIGATION SPRINKLER SCHEDULE

SYMBOL	ITEM DESCRIPTION	SPRINKLER TYPE	OPERATING PRESSURE psi	DISCHARGE RATE (+/-5%) GPH	PRESSURE COMPENSATING	REMARKS
DIT	DRIP IRRIGATION TUBING	EMITTER	20	2.0	Req	TWO EMITTERS PER PLANT. LOCATE AT UPHILL EDGE OF PLANTING HOLE. USE EXTERNAL BARBED EMITTERS.

IRRIGATION SPRINKLER SCHEDULE
ISS-1

STATE OF CALIFORNIA - DEPARTMENT OF TRANSPORTATION
Caltrans® LANDSCAPE ARCHITECTURE

SENIOR LANDSCAPE ARCHITECT: CORBY KILMER

CALCULATED-DESIGNED BY: CHELSEA MOORE | CHECKED BY: PKB

REVISED BY: CKM | DATE REVISED: 10-29-21

LAST REVISION: 00-00-00 | DATE PLOTTED => 1-NOV-2021 | TIME PLOTTED => 10:59

DocuSign Envelope ID: EF8475C0-0470-4E52-B5B5-25D92AE11799

Dist	COUNTY	ROUTE	POST MILES TOTAL PROJECT	SHEET No.	TOTAL SHEETS
05	SCr	9	13.6/15.5		

LICENSED LANDSCAPE ARCHITECT

PLANS APPROVAL DATE

LICENSED LANDSCAPE ARCHITECT
Chelsea K Moore No. 6589
Signature
1-31-22
Renewal Date
xx-xx-xx
Date
STATE OF CALIFORNIA

THE STATE OF CALIFORNIA OR ITS OFFICERS OR AGENTS SHALL NOT BE RESPONSIBLE FOR THE ACCURACY OR COMPLETENESS OF SCANNED COPIES OF THIS PLAN SHEET.

NOTE:

FOR ACCURATE RIGHT OF WAY DATA, CONTACT RIGHT OF WAY ENGINEERING AT THE DISTRICT OFFICE.

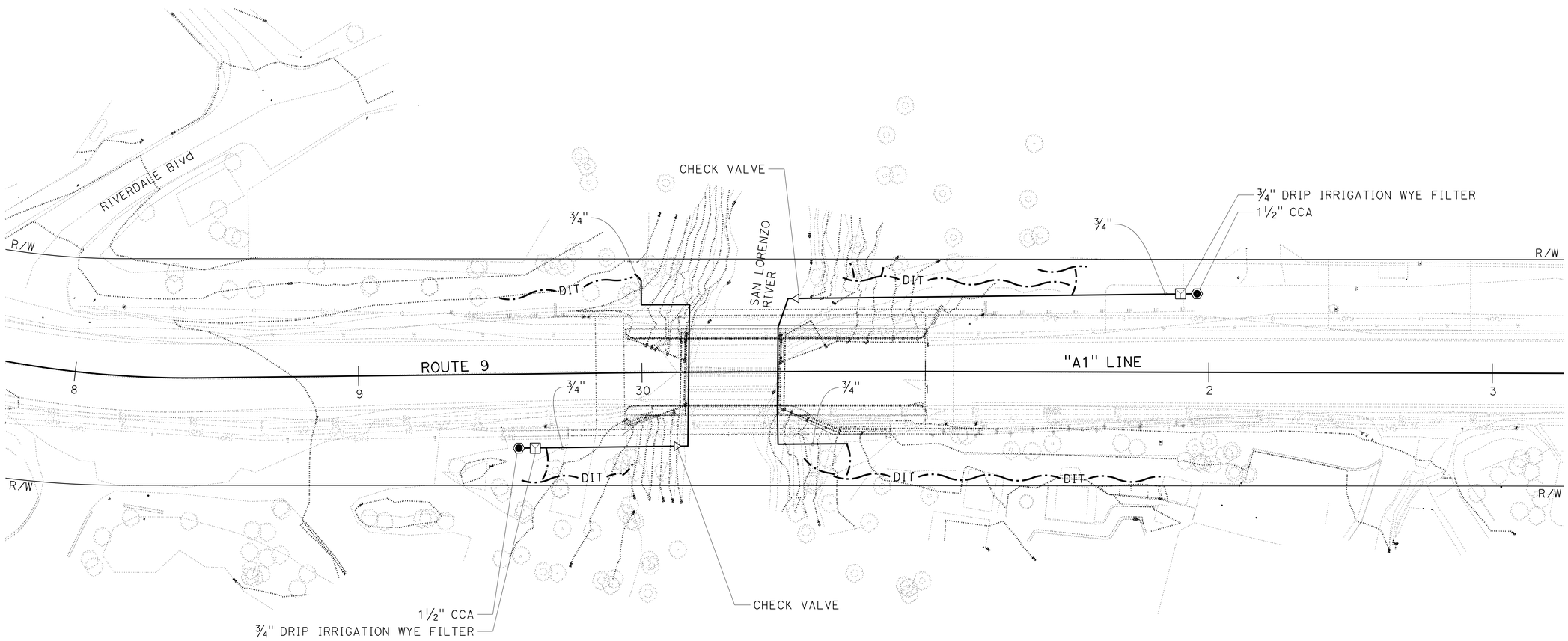

SAN LORENZO RIVER BRIDGE
PM 13.6

APPROVED FOR IRRIGATION WORK ONLY

IRRIGATION PLAN

SCALE: 1"=20'

IP-1

STATE OF CALIFORNIA - DEPARTMENT OF TRANSPORTATION
Caltrans® LANDSCAPE ARCHITECTURE

SENIOR LANDSCAPE ARCHITECT: CORBY KILMER

CALCULATED-DESIGNED BY: CHELSEA MOORE
CHECKED BY: PKB

REVISED BY: CKM
DATE REVISED: 10-29-21

LAST REVISION: 00-00-00
DATE PLOTTED => 1-NOV-2021
TIME PLOTTED => 10:13

DocuSign Envelope ID: EF8475C0-0470-4E52-B5B5-25D92AE11799

Dist	COUNTY	ROUTE	POST MILES TOTAL PROJECT	SHEET No.	TOTAL SHEETS
05	SCr	9	13.6/15.5		

LICENSED LANDSCAPE ARCHITECT

PLANS APPROVAL DATE

LICENSED LANDSCAPE ARCHITECT
Chelsea K Moore No. 6589
Signature
1-31-22
Renewal Date
xx-xx-xx
Date
STATE OF CALIFORNIA

THE STATE OF CALIFORNIA OR ITS OFFICERS OR AGENTS SHALL NOT BE RESPONSIBLE FOR THE ACCURACY OR COMPLETENESS OF SCANNED COPIES OF THIS PLAN SHEET.

NOTE:

FOR ACCURATE RIGHT OF WAY DATA, CONTACT RIGHT OF WAY ENGINEERING AT THE DISTRICT OFFICE.

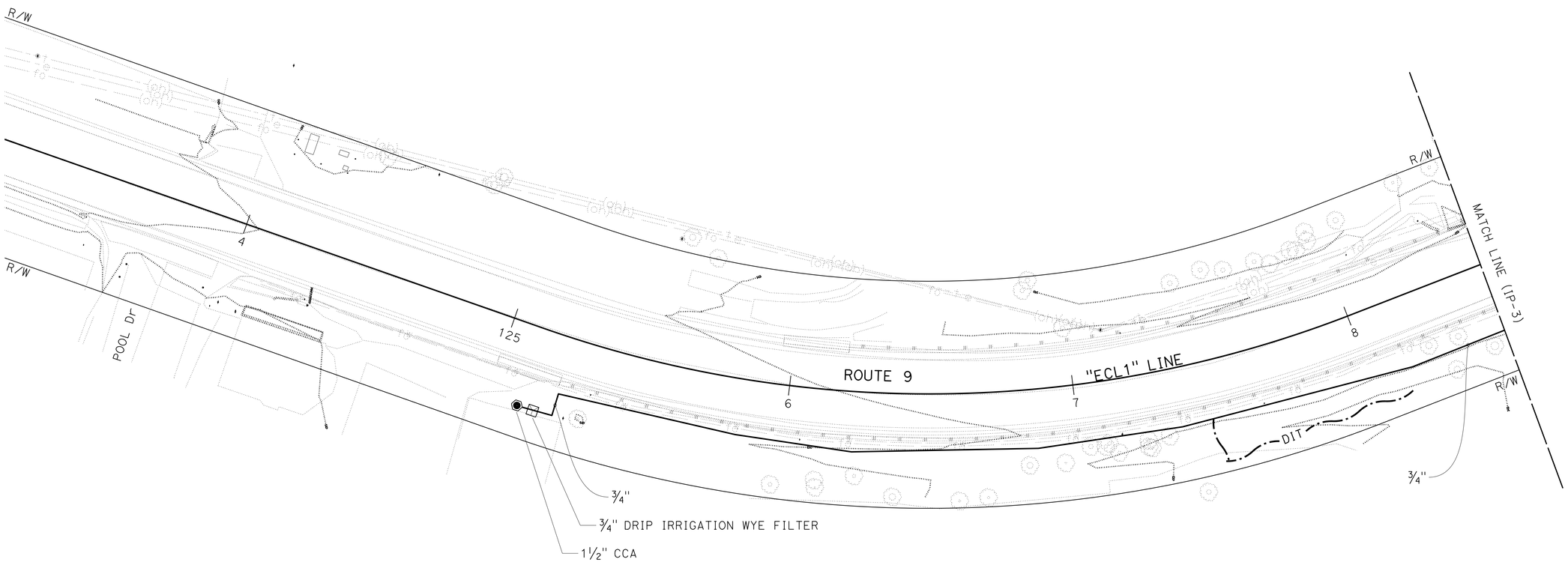

KINGS CREEK BRIDGE
PM 15.5

APPROVED FOR IRRIGATION WORK ONLY

IRRIGATION PLAN

SCALE: 1"=20'

IP-2

STATE OF CALIFORNIA - DEPARTMENT OF TRANSPORTATION
Caltrans® LANDSCAPE ARCHITECTURE

SENIOR LANDSCAPE ARCHITECT: CORBY KILMER

CALCULATED-DESIGNED BY: CHELSEA MOORE
CHECKED BY: PKB

REVISED BY: CKM
DATE REVISED: 10-29-21

LAST REVISION 00-00-00
DATE PLOTTED => 1-NOV-2021
TIME PLOTTED => 10:24

DocuSign Envelope ID: EF8475C0-0470-4E52-B5B5-25D92AE11799

Dist	COUNTY	ROUTE	POST MILES TOTAL PROJECT	SHEET No.	TOTAL SHEETS
05	SCr	9	13.6/15.5		

LICENSED LANDSCAPE ARCHITECT

PLANS APPROVAL DATE

LICENSED LANDSCAPE ARCHITECT Chelsea K Moore No. 6599 Signature 1-31-22 Renewal Date xx-xx-xx Date STATE OF CALIFORNIA

THE STATE OF CALIFORNIA OR ITS OFFICERS OR AGENTS SHALL NOT BE RESPONSIBLE FOR THE ACCURACY OR COMPLETENESS OF SCANNED COPIES OF THIS PLAN SHEET.

NOTE:

FOR ACCURATE RIGHT OF WAY DATA, CONTACT RIGHT OF WAY ENGINEERING AT THE DISTRICT OFFICE.

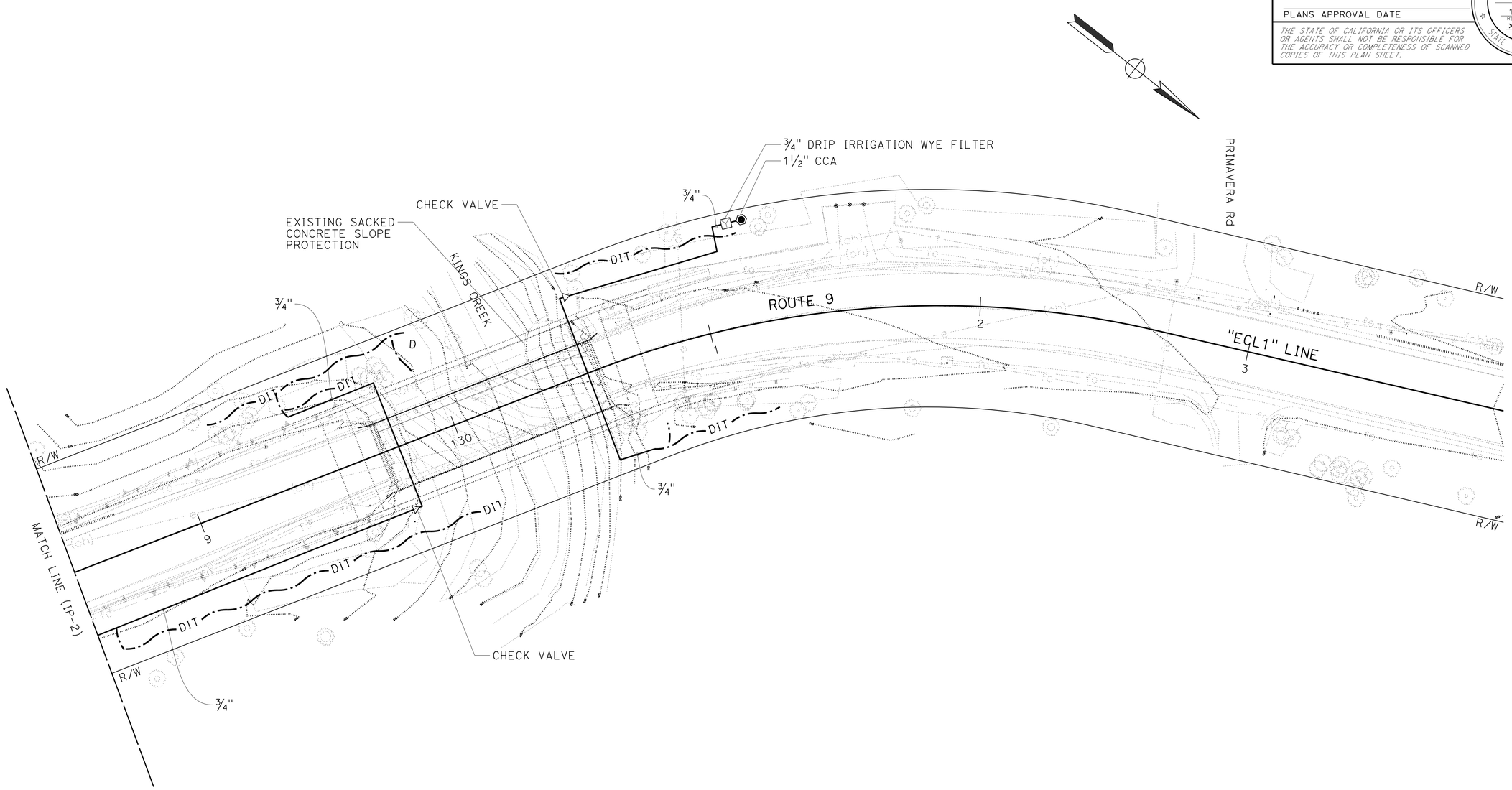

KINGS CREEK BRIDGE
PM 15.5

APPROVED FOR IRRIGATION WORK ONLY

IRRIGATION PLAN

SCALE: 1"=20' **IP-3**

STATE OF CALIFORNIA - DEPARTMENT OF TRANSPORTATION
Caltrans® LANDSCAPE ARCHITECTURE

SENIOR LANDSCAPE ARCHITECT: CORBY KILMER

CALCULATED-DESIGNED BY: CHELSEA MOORE
CHECKED BY: PKB

REVISED BY: CKM
DATE REVISED: 10-29-21

LAST REVISION: 00-00-00
DATE PLOTTED => 1-NOV-2021
TIME PLOTTED => 10:37

DocuSign Envelope ID: EF8475C0-0470-4E52-B5B5-25D92AE11799

Dist	COUNTY	ROUTE	POST MILES TOTAL PROJECT	SHEET No.	TOTAL SHEETS
05	SCr	9	13.6/15.5		

LICENSED LANDSCAPE ARCHITECT

PLANS APPROVAL DATE

LICENSED LANDSCAPE ARCHITECT Chelsea K Moore No. 6599 Signature 1-31-22 Renewal Date xx-xx-xx Date STATE OF CALIFORNIA

THE STATE OF CALIFORNIA OR ITS OFFICERS OR AGENTS SHALL NOT BE RESPONSIBLE FOR THE ACCURACY OR COMPLETENESS OF SCANNED COPIES OF THIS PLAN SHEET.

NOTE:

UNDERLINED PORTIONS OF BOTANICAL NAME INDICATE ABBREVIATIONS USED ON PLANTING PLANS.

PLANT LEGEND

PLANT GROUP (SIZE)	PLANT No.	SYMBOL	BOTANICAL NAME	COMMON NAME	HOLE SIZE DIAMETER INCH	HOLE SIZE DEPTH INCH	BASIN TYPE	③ WOOD MULCH BASIN CF	① ② SOIL AMENDMENT CF	ON CENTER SPACING ft	MINIMUM PLANTING DISTANCE FROM: ⑧ ETW ft	EP ft	FENCE ft	WALL ft	PAVED DITCH ft	EARTH DITCH ft	REMARKS
A (No. 1)	1		HETEROMELES ARBUTIFOLIA	TOYON	14	10	I	1	0.25	12		12	12	10	10	6	SHRUB ⑤⑥
	2		RHAMNUS CALIFORNICA	COFFEEBERRY	14	10	I	1	0.25	12		10	10	8	8	6	SHRUB ⑤⑥
B (No. 5)	3		ACER MACROPHYLLUM	BIG-LEAF MAPLE	24	18	I	2	0.5	⑦	30		10	10	10	6	TREE ⑤⑥
	4		ALNUS RUBRA	RED ALDER	24	18	I	2	0.5	⑦	30		10	10	10	6	TREE ⑤⑥
	5		PSEUDOTSUGA MENZIESII	DOUGLAS FIR	24	18	I	2	0.5	⑦	30		10	10	10	6	TREE ⑤⑥
	6		SEQUOIA SEMPERVIRENS	REDWOOD	24	18	I	2	0.5	⑦	30		10	10	10	6	TREE ⑤⑥
	7		UMBELLULARIA CALIFORNICA	BAY LAUREL	24	18	I	2	0.5	⑦	30		10	10	10	6	TREE ⑤⑥
H (CUTTING)	8		SALIX LASIOLEPIS	ARROYO WILLOW	④	24				6	30		6	6	6	6	SHRUB

LEGEND:

LIMITS OF ROADSIDE CLEARING, INVASIVE PLANT MANAGEMENT, AND PLANT ESTABLISHMENT

PLANTING REQUIREMENTS

① QUANTITIES SHOWN ARE "PER PLANT"
② SOIL AMENDMENT MUST BE FINE COMPOST
③ BASIN MULCH TO BE WOOD CHIP MULCH
④ SUFFICIENT TO RECEIVE CUTTING
⑤ FOLIAGE PROTECTOR REQUIRED
⑥ ROOT PROTECTOR REQUIRED
⑦ AS SHOWN ON PLAN. VARY PLANT SPACING UP TO 3' TO PROVIDE A MORE RANDOM NATURAL APPEARANCE.
⑧ NOT APPLICABLE WHERE TREES ARE BEHIND BARRIER. WHERE TREES ARE BEHIND BARRIER, USE MINIMUM PLANTING DISTANCE OF 10' FROM BARRIER.

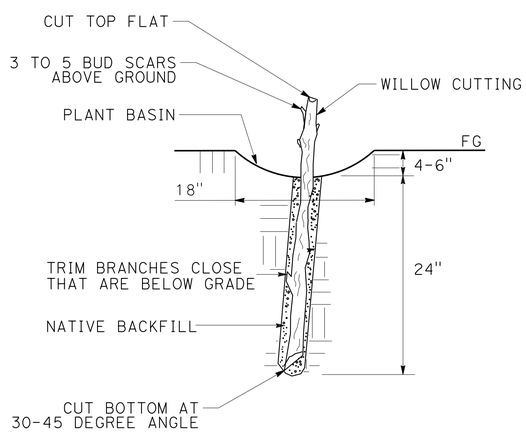

SECTION

WILLOW CUTTING

NO SCALE

PLANT QUANTITIES

BOTANICAL NAME	COMMON NAME	PLANT GROUP A EA	PLANT GROUP B EA	PLANT GROUP H EA	WOOD MULCH BASIN CY	SOIL AMENDMENT CY	FOLIAGE PROTECTOR EA	ROOT PROTECTOR EA
ACER MACROPHYLLUM	BIG LEAF MAPLE		6		0.4	0.1	6	6
ALNUS RUBRA	RED ALDER		8		0.6	0.1	8	8
PSEUDOTSUGA MENZIESII	DOUGLAS FIR		5		0.4	0.1	5	5
SEQUOIA SEMPERVIRENS	COAST REDWOOD		19		1.4	0.4	19	19
UMBELLULARIA CALIFORNICA	BAY LAUREL		12		0.9	0.2	12	12
HETEROMELES ARBUTIFOLIA	TOYON	17			0.6	0.2	17	17
RHAMNUS CALIFORNICA	COFFEEBERRY	23			0.9	0.2	23	23
SALIX LASIOLEPIS	ARROYO WILLOW			76				
	TOTAL	40	50	76	5.6	1.3	90	90

PLANT LEGEND
PL-1

REVISED BY CKM | DATE REVISED 10-29-21
CHELSEA MOORE | PKB
CALCULATED-DESIGNED BY | CHECKED BY
SENIOR LANDSCAPE ARCHITECT CORBY KILMER
STATE OF CALIFORNIA - DEPARTMENT OF TRANSPORTATION
Caltrans® LANDSCAPE ARCHITECTURE

LAST REVISION 00-00-00 | DATE PLOTTED => 29-OCT-2021 | TIME PLOTTED => 15:21

DocuSign Envelope ID: EF8475C0-0470-4E52-B5B5-25D92AE11799

Dist	COUNTY	ROUTE	POST MILES TOTAL PROJECT	SHEET No.	TOTAL SHEETS
05	SCr	9	13.6/15.5		

LICENSED LANDSCAPE ARCHITECT

PLANS APPROVAL DATE

LICENSED LANDSCAPE ARCHITECT
Chelsea K Moore No. 6599
Signature
1-31-22
Renewal Date
xx-xx-xx
Date
STATE OF CALIFORNIA

THE STATE OF CALIFORNIA OR ITS OFFICERS OR AGENTS SHALL NOT BE RESPONSIBLE FOR THE ACCURACY OR COMPLETENESS OF SCANNED COPIES OF THIS PLAN SHEET.

NOTE:

1. FOR ACCURATE RIGHT OF WAY DATA, CONTACT RIGHT OF WAY ENGINEERING AT THE DISTRICT OFFICE
2. FIELD FIT PROPOSED PLANTING WHERE SPACE ALLOWS TO MINIMIZE DISTURBANCE TO EXISTING TREES AND SHRUBS

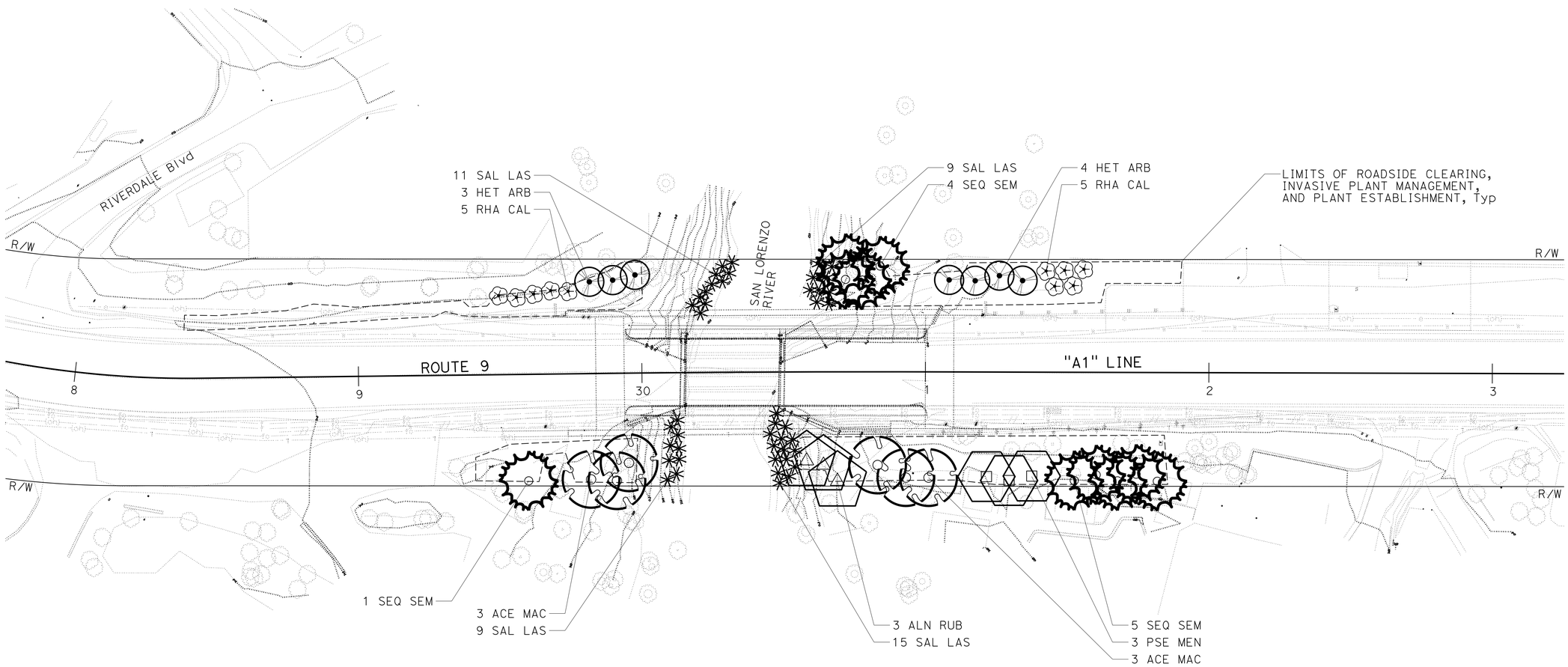

SAN LORENZO RIVER BRIDGE
PM 13.6

APPROVED FOR PLANTING WORK ONLY

PLANTING PLAN

SCALE: 1"=20'

PP-1

STATE OF CALIFORNIA - DEPARTMENT OF TRANSPORTATION
Caltrans® LANDSCAPE ARCHITECTURE

SENIOR LANDSCAPE ARCHITECT: CORBY KILMER

CALCULATED-DESIGNED BY: CHELSEA MOORE
CHECKED BY: PKB

REVISED BY: CKM
DATE REVISED: 10-29-21

LAST REVISION: 00-00-00
DATE PLOTTED => 29-OCT-2021
TIME PLOTTED => 14:54

DocuSign Envelope ID: EF8475C0-0470-4E52-B5B5-25D92AE11799

Dist	COUNTY	ROUTE	POST MILES TOTAL PROJECT	SHEET No.	TOTAL SHEETS
05	SCr	9	13.6/15.5		

LICENSED LANDSCAPE ARCHITECT

PLANS APPROVAL DATE

LICENSED LANDSCAPE ARCHITECT
Chelsea K Moore No. 6599
Signature
1-31-22
Renewal Date
xx-xx-xx
Date
STATE OF CALIFORNIA

THE STATE OF CALIFORNIA OR ITS OFFICERS OR AGENTS SHALL NOT BE RESPONSIBLE FOR THE ACCURACY OR COMPLETENESS OF SCANNED COPIES OF THIS PLAN SHEET.

NOTE:

1. FOR ACCURATE RIGHT OF WAY DATA, CONTACT RIGHT OF WAY ENGINEERING AT THE DISTRICT OFFICE
2. FIELD FIT PROPOSED PLANTING WHERE SPACE ALLOWS TO MINIMIZE DISTURBANCE TO EXISTING TREES AND SHRUBS

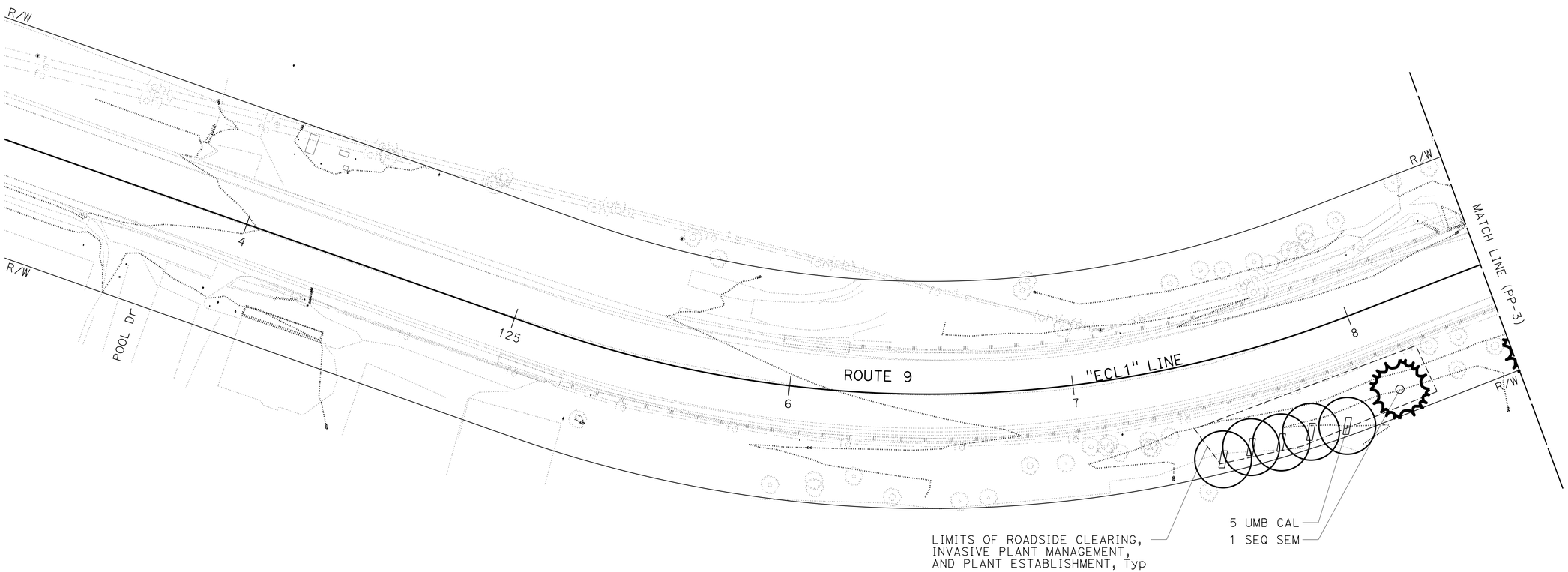

KINGS CREEK BRIDGE
PM 15.5

APPROVED FOR PLANTING WORK ONLY

PLANTING PLAN

SCALE: 1"=20' **PP-2**

STATE OF CALIFORNIA - DEPARTMENT OF TRANSPORTATION	
Caltrans® LANDSCAPE ARCHITECTURE	
SENIOR LANDSCAPE ARCHITECT	CORBY KILMER
CALCULATED-DESIGNED BY	CHELSEA MOORE
CHECKED BY	PKB
REVISED BY	CKM
DATE REVISED	10-29-21

LAST REVISION 00-00-00
DATE PLOTTED => 29-OCT-2021
TIME PLOTTED => 14:50

DocuSign Envelope ID: EF8475C0-0470-4E52-B5B5-25D92AE11799

Dist	COUNTY	ROUTE	POST MILES TOTAL PROJECT	SHEET No.	TOTAL SHEETS
05	SCr	9	13.6/15.5		

LICENSED LANDSCAPE ARCHITECT

PLANS APPROVAL DATE

LICENSED LANDSCAPE ARCHITECT
Chelsea K Moore No. 6599
Signature
1-31-22
Renewal Date
xx-xx-xx
Date
STATE OF CALIFORNIA

THE STATE OF CALIFORNIA OR ITS OFFICERS OR AGENTS SHALL NOT BE RESPONSIBLE FOR THE ACCURACY OR COMPLETENESS OF SCANNED COPIES OF THIS PLAN SHEET.

NOTE:

1. FOR ACCURATE RIGHT OF WAY DATA, CONTACT RIGHT OF WAY ENGINEERING AT THE DISTRICT OFFICE
2. FIELD FIT PROPOSED PLANTING WHERE SPACE ALLOWS TO MINIMIZE DISTURBANCE TO EXISTING TREES AND SHRUBS

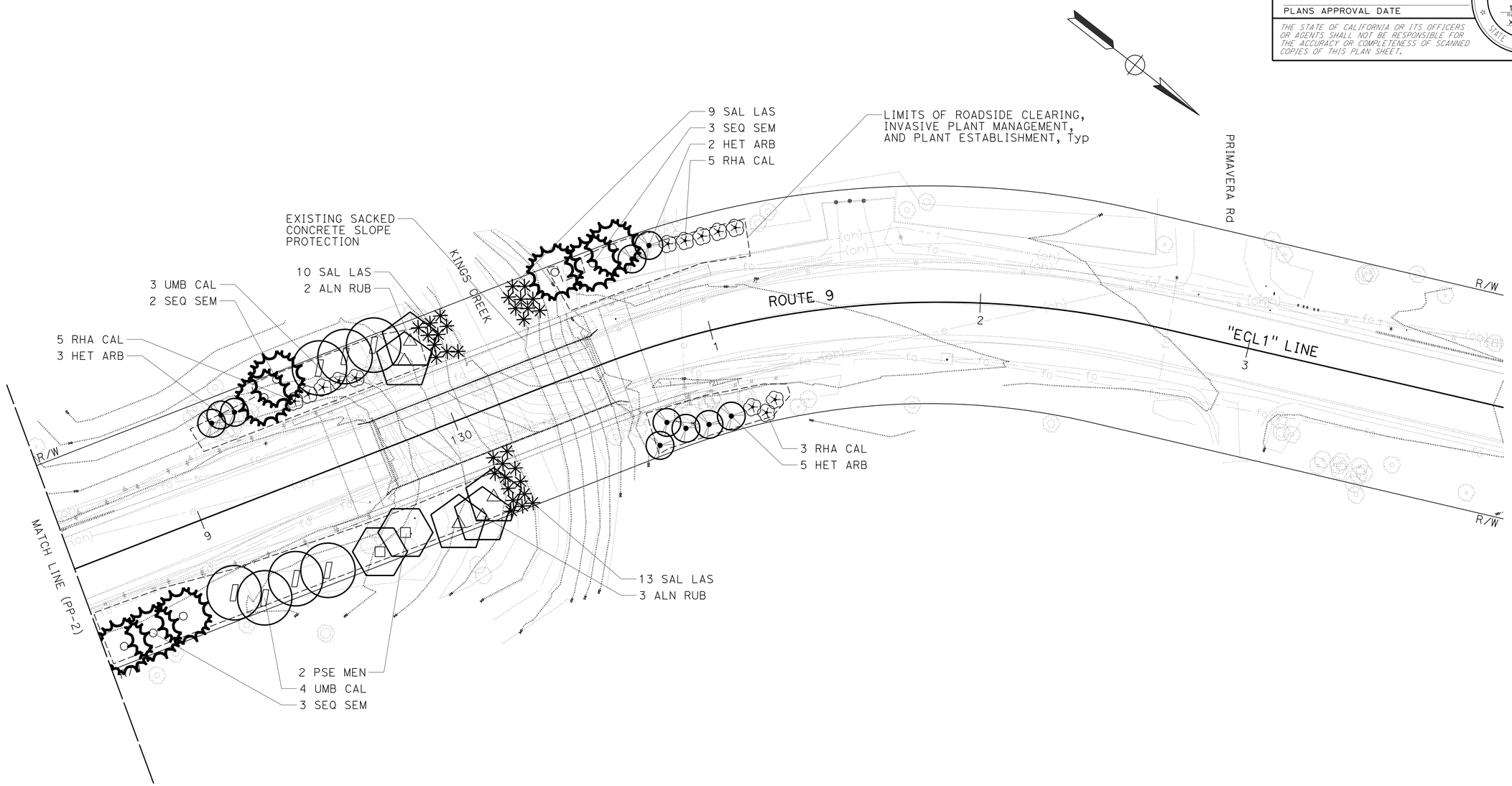

KINGS CREEK BRIDGE
PM 15.5

APPROVED FOR PLANTING WORK ONLY

PLANTING PLAN

SCALE: 1"=20' **PP-3**

STATE OF CALIFORNIA - DEPARTMENT OF TRANSPORTATION
Caltrans LANDSCAPE ARCHITECTURE

SENIOR LANDSCAPE ARCHITECT: CORBY KILMER

CALCULATED-DESIGNED BY: CHELSEA MOORE
CHECKED BY: PKB

REVISED BY: CKM
DATE REVISED: 10-29-21

LAST REVISION 00-00-00
DATE PLOTTED => 29-OCT-2021
TIME PLOTTED => 15:14

DocuSign Envelope ID: EF8475C0-0470-4E52-B5B5-25D92AE11799

Dist	COUNTY	ROUTE	POST MILES TOTAL PROJECT	SHEET No.	TOTAL SHEETS
05	SCr	9	13.6/15.5		

LICENSED LANDSCAPE ARCHITECT

PLANS APPROVAL DATE

THE STATE OF CALIFORNIA OR ITS OFFICERS OR AGENTS SHALL NOT BE RESPONSIBLE FOR THE ACCURACY OR COMPLETENESS OF SCANNED COPIES OF THIS PLAN SHEET.

LICENSED LANDSCAPE ARCHITECT
Chelsea K Moore No. 6599
Signature
1-31-22
Renewal Date
xx-xx-xx
Date
STATE OF CALIFORNIA

EROSION CONTROL TYPE 1

SEQUENCE	ITEM	MATERIAL		APPLICATION RATE	REMARKS
		DESCRIPTION	TYPE		
STEP 1	COMPOST	COMPOST	FINE	135 CY/ACRE	COMPOST RATE EQUALS APPROXIMATELY 1" DEPTH
STEP 2	HYDROSEED	SEED	MIX 1	18.5 LB/ACRE	
		FIBER	WOOD	3,000 LB/ACRE	
		TACKIFIER	PSYLLIUM	200 LB/ACRE	
STEP 3	RECP NETTING	NETTING	A		

EROSION CONTROL TYPE 2

SEQUENCE	ITEM	MATERIAL		APPLICATION RATE	REMARKS
		DESCRIPTION	TYPE		
STEP 1	COMPOST	COMPOST	FINE	135 CY/ACRE	COMPOST RATE EQUALS APPROXIMATELY 1" DEPTH
STEP 2	HYDROSEED	SEED	MIX 1	18.5 LB/ACRE	
		FIBER	WOOD	3,000 LB/ACRE	
		TACKIFIER	PSYLLIUM	200 LB/ACRE	

EROSION CONTROL TYPE 3

SEQUENCE	ITEM	MATERIAL		APPLICATION RATE	REMARKS
		DESCRIPTION	TYPE		
STEP 1	COMPOST	COMPOST	FINE	135 CY/ACRE	COMPOST RATE EQUALS APPROXIMATELY 1" DEPTH
STEP 2	DRY SEED	SEED	MIX 2	6.1 LB/ACRE	

COMPOST SOCK

SEQUENCE	ITEM	MATERIAL		REMARKS
		DESCRIPTION	TYPE	
IN EC AREAS, COMPOST SOCK MUST BE INSTALLED AFTER HYDROSEED AND NETTING	COMPOST SOCK	MESH TUBE	8" Dia BURLAP	TYPE 2 INSTALLATION

SEED MIX 1 (RIPARIAN)

BOTANICAL NAME (COMMON NAME)	PERCENT GERMINATION (MINIMUM)	POUNDS PURE LIVE SEED PER ACRE (SLOPE MEASUREMENT)
ACHILLEA MILLEFOLIUM (WHITE YARROW)	75	0.3
ACMISPON GLABAR (DEER WEED)	70	3.0
ARTEMISIA DOUGLASIANA (MUGWORT)	40	0.1
BROMUS CARINATUS (CA BROME)	70	3.0
ELYMUS GLAUCUS (BLUE WILD RYE)	70	2.0
HORDEUM BRACHYANTHERUM (BARLEY)	70	3.0
JUNCUS BALTICUS (BALTIC RUSH)	50	0.1
ROSA CALIFORNICA (CA ROSE)	40	1.0
TRIFOLIUM WILLDENOVII (TOMCAT CLOVER)	70	2.0
VULPIA MICROSTACHYS (SMALL FESCUE)	70	4.0

SEED MIX 2 (WETLAND)

BOTANICAL NAME (COMMON NAME)	PERCENT GERMINATION (MINIMUM)	POUNDS PURE LIVE SEED PER ACRE (SLOPE MEASUREMENT)
ACHILLEA MILLEFOLIUM (WHITE YARROW)	75	0.2
CYPERUS ERAGROSTIS (TALL FLATSEDGE)	70	0.2
ELYMUS GLAUCUS (BLUE WILD RYE)	70	3.5
JUNCUS BUFONIUS (TOAD RUSH)	55	0.1
JUNCUS MEXICANUS (MEXICAN RUSH)	60	0.1
TRIFOLIUM WILLDENOVII (TOMCAT CLOVER)	70	2.0

EROSION CONTROL QUANTITIES

DESCRIPTION	COMPOST	HYDROSEED	DRY SEED	RECP NETTING	COMPOST SOCK	HYDROSEED MATERIALS (N)		
						MIX 1	FIBER	TACKIFIER
	CY	SQFT	SQFT	SQFT	LF	LB	LB	LB
EC TYPE 1	13.3	4,294		4,294	220	1.8	296	20
EC TYPE 2	54.9	17,721				7.5	1,220	81
EC TYPE 3	1.2		396					
TOTAL	69.4	22,015	396	4,294	220			

(N) - NOT A SEPARATE BID ITEM.

EROSION CONTROL LEGEND
ECL-1

REVISED BY	DATE REVISED
CKM	10-29-21

CALCULATED-DESIGNED BY	CHECKED BY
CHELSEA MOORE	PKB

SENIOR LANDSCAPE ARCHITECT: CORBY KILMER

STATE OF CALIFORNIA - DEPARTMENT OF TRANSPORTATION
Caltrans® LANDSCAPE ARCHITECTURE

DocuSign Envelope ID: EF8475C0-0470-4E52-B5B5-25D92AE11799

Dist	COUNTY	ROUTE	POST MILES TOTAL PROJECT	SHEET No.	TOTAL SHEETS
05	SCr	9	13.6/15.5		

LICENSED LANDSCAPE ARCHITECT

PLANS APPROVAL DATE

LICENSED LANDSCAPE ARCHITECT Chelsea K Moore No. 6599 Signature 1-31-22 Renewal Date xx-xx-xx Date STATE OF CALIFORNIA

THE STATE OF CALIFORNIA OR ITS OFFICERS OR AGENTS SHALL NOT BE RESPONSIBLE FOR THE ACCURACY OR COMPLETENESS OF SCANNED COPIES OF THIS PLAN SHEET.

NOTE:

FOR ACCURATE RIGHT OF WAY DATA, CONTACT RIGHT OF WAY ENGINEERING AT THE DISTRICT OFFICE.

LEGEND:

- EROSION CONTROL TYPE 1
- EROSION CONTROL TYPE 2
- EROSION CONTROL TYPE 3
- COMPOST SOCK

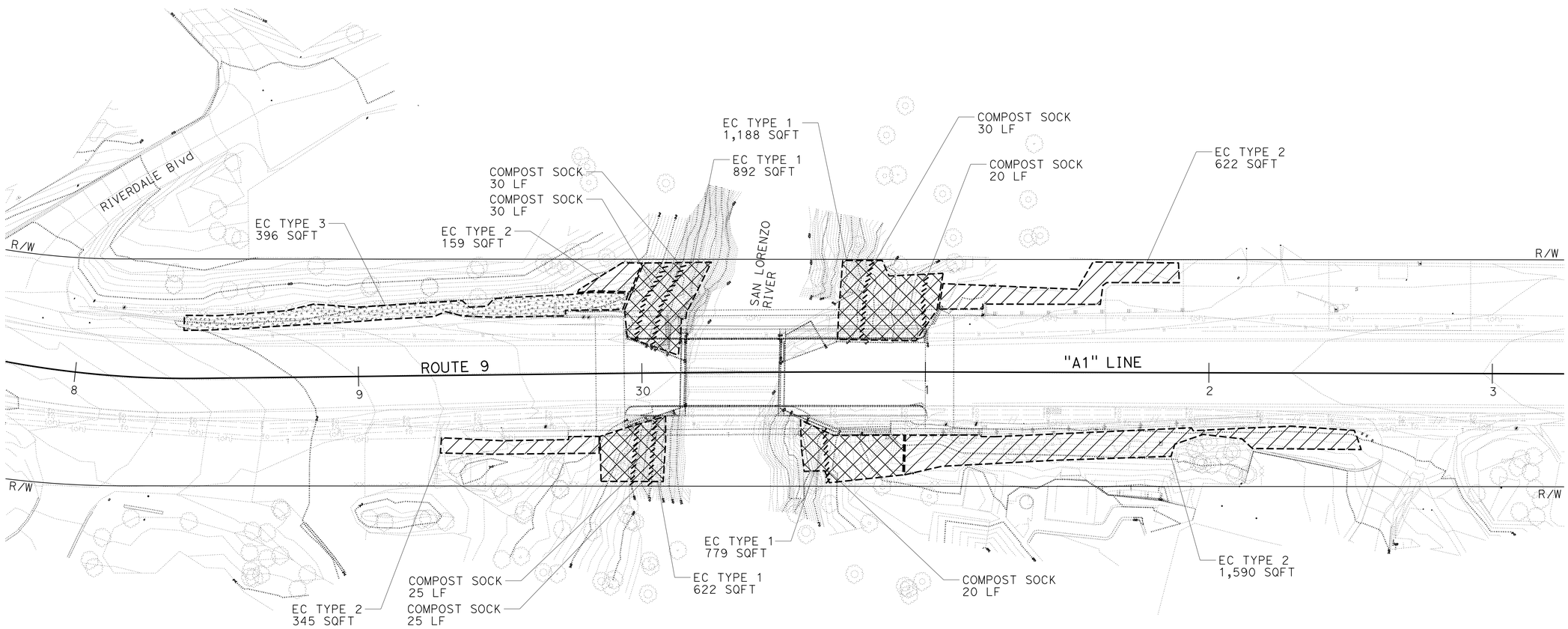

SAN LORENZO RIVER BRIDGE
PM 13.6

APPROVED FOR EROSION CONTROL WORK ONLY

EROSION CONTROL PLAN

SCALE: 1"=20'

EC-1

STATE OF CALIFORNIA - DEPARTMENT OF TRANSPORTATION
Caltrans® LANDSCAPE ARCHITECTURE

SENIOR LANDSCAPE ARCHITECT: CORBY KILMER

CALCULATED-DESIGNED BY: CHELSEA MOORE
CHECKED BY: PKB

REVISED BY: CKM
DATE REVISED: 10-29-21

LAST REVISION: 00-00-00
DATE PLOTTED => 29-OCT-2021
TIME PLOTTED => 15:36

DocuSign Envelope ID: EF8475C0-0470-4E52-B5B5-25D92AE11799

Dist	COUNTY	ROUTE	POST MILES TOTAL PROJECT	SHEET No.	TOTAL SHEETS
05	SCr	9	13.6/15.5		

LICENSED LANDSCAPE ARCHITECT

PLANS APPROVAL DATE

LICENSED LANDSCAPE ARCHITECT
Chelsea K Moore No. 6589
Signature
1-31-22
Renewal Date
xx-xx-xx
Date
STATE OF CALIFORNIA

THE STATE OF CALIFORNIA OR ITS OFFICERS OR AGENTS SHALL NOT BE RESPONSIBLE FOR THE ACCURACY OR COMPLETENESS OF SCANNED COPIES OF THIS PLAN SHEET.

NOTE:

FOR ACCURATE RIGHT OF WAY DATA, CONTACT
RIGHT OF WAY ENGINEERING AT THE DISTRICT OFFICE.

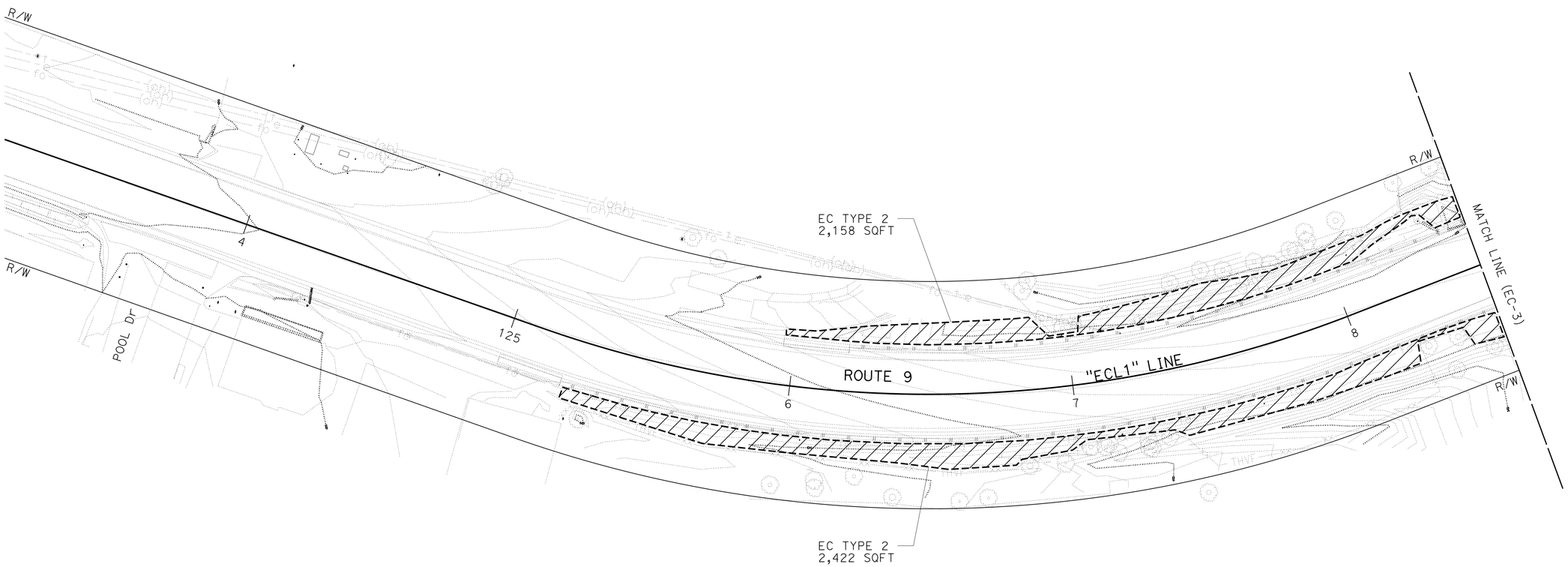

KINGS CREEK BRIDGE
PM 15.5

APPROVED FOR EROSION CONTROL WORK ONLY

EROSION CONTROL PLAN

SCALE: 1"=20′ **EC-2**

STATE OF CALIFORNIA - DEPARTMENT OF TRANSPORTATION
Caltrans® LANDSCAPE ARCHITECTURE

SENIOR LANDSCAPE ARCHITECT: CORBY KILMER

CALCULATED-DESIGNED BY: CHELSEA MOORE
CHECKED BY: PKB

REVISED BY: CKM
DATE REVISED: 10-29-21

LAST REVISION 00-00-00
DATE PLOTTED => 29-OCT-2021
TIME PLOTTED => 15:39

DocuSign Envelope ID: EF8475C0-0470-4E52-B5B5-25D92AE11799

Dist	COUNTY	ROUTE	POST MILES TOTAL PROJECT	SHEET No.	TOTAL SHEETS
05	SCr	9	13.6/15.5		

LICENSED LANDSCAPE ARCHITECT

PLANS APPROVAL DATE

THE STATE OF CALIFORNIA OR ITS OFFICERS OR AGENTS SHALL NOT BE RESPONSIBLE FOR THE ACCURACY OR COMPLETENESS OF SCANNED COPIES OF THIS PLAN SHEET.

LICENSED LANDSCAPE ARCHITECT
Chelsea K Moore No. 6589
Signature
1-31-22
Renewal date
xx-xx-xx
Date
STATE OF CALIFORNIA

NOTE:

FOR ACCURATE RIGHT OF WAY DATA, CONTACT RIGHT OF WAY ENGINEERING AT THE DISTRICT OFFICE.

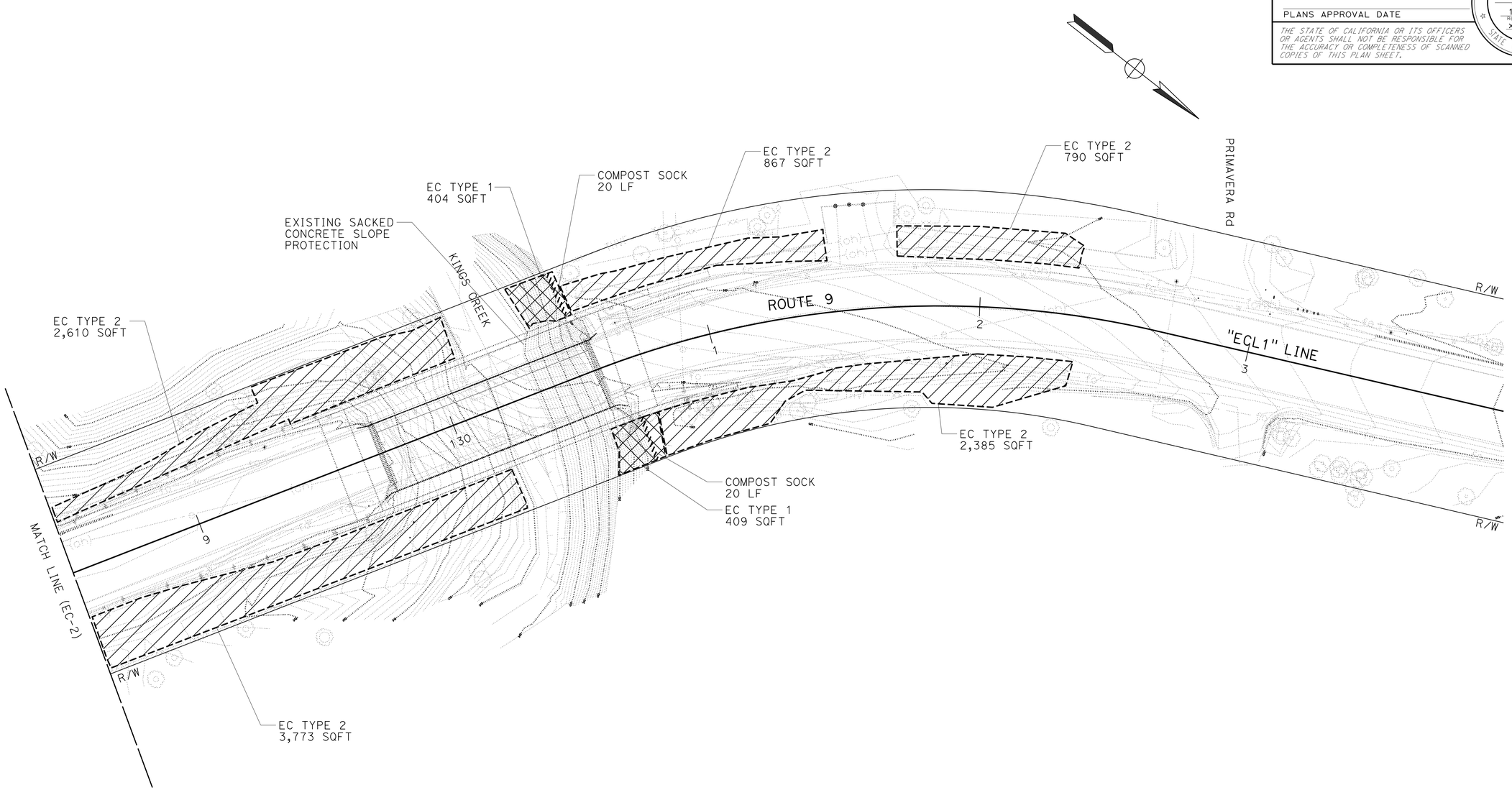

KINGS CREEK BRIDGE
PM 15.5

APPROVED FOR EROSION CONTROL WORK ONLY

EROSION CONTROL PLAN

SCALE: 1"=20'

EC-3

STATE OF CALIFORNIA - DEPARTMENT OF TRANSPORTATION
Caltrans® LANDSCAPE ARCHITECTURE

SENIOR LANDSCAPE ARCHITECT: CORBY KILMER

CALCULATED-DESIGNED BY: CHELSEA MOORE
CHECKED BY: PKB

REVISED BY: CKM
DATE REVISED: 10-29-21

LAST REVISION: 00-00-00
DATE PLOTTED => 29-OCT-2021
TIME PLOTTED => 15:53

DocuSign Envelope ID: EF8475C0-0470-4E52-B5B5-25D92AE11799

Dist	COUNTY	ROUTE	POST MILES TOTAL PROJECT	SHEET No.	TOTAL SHEETS
05	SCr	9	13.6/15.5		??

REGISTERED ELECTRICAL ENGINEER DATE

PLANS APPROVAL DATE

THE STATE OF CALIFORNIA OR ITS OFFICERS OR AGENTS SHALL NOT BE RESPONSIBLE FOR THE ACCURACY OR COMPLETENESS OF SCANNED COPIES OF THIS PLAN SHEET.

REGISTERED PROFESSIONAL ENGINEER BRYAN SABAGQUIT No. E21616 Exp. 9/30/22 ELECTRICAL STATE OF CALIFORNIA

LEGEND:

1 120/240 V, SINGLE PHASE, 3-WIRE, TYPE A SERVICE ON TEMPORARY WOOD POLE WITH THE FOLLOWING CIRCUIT BREAKERS:

AMPERES	VOLTS	POLES	NAMEPLATE	METER	PHOTOELECTRIC CONTROL TYPE
100	240	2	MAIN DISCONNECT	YES	-
20	120	1	LIGHTING	YES	IV
15	120	1	FLASHING BEACONS	YES	-
30	120	1	SIGNAL	YES	-

2 SEE DETAIL E ON SHEET ED-2 FOR TEMPORARY WOOD POLE.

3 DEPARTMENT-FURNISHED MODEL 2070E CONTROLLER ASSEMBLY, ADD UPS, WIRELESS MODEM, AND VID EQUIPMENT. FOR CABINET PLATFORM, SEE DETAIL C ON SHEET ED-1.

4 SPLICE THREE TYPE A LOOP DETECTORS TO ONE TYPE D. PLACE LOOP DETECTORS AS SHOWN IN DETAIL D ON SHEET ED-1.

5 SECURE CONDUIT TO Exist BRIDGE RAIL.

6 GENERATOR SYSTEM WITH CHAIN LINK FENCE AND GATE AS SHOWN IN DETAIL G ON SHEET ED-2.

7 SEE DETAIL B ON SHEET ED-1 FOR TEMPORARY WOOD POLES Sig AND Ltg.

8 ADD TEMPORARY WOOD POLE TO MAINTAIN Max SPACING.

9 SEE DETAIL F ON SHEET ED-2 FOR TEMPORARY WOOD POLE Ltg WITH TYPE III PEC.

10 FOR R10-26 SIGN DETAILS REFER TO TRAFFIC HANDLING PLANS.

11 SEE DETAIL A ON SHEET ED-1 FOR TEMPORARY WOOD POLE Sig.

12 SEE DETAIL H ON SHEET ED-2 FOR TEMPORARY WOOD POLE FB.

ABBREVIATIONS:

PG&E	PACIFIC GAS AND ELECTRIC COMPANY
VID	VIDEO IMAGE DETECTION

SYMBOLS:

Y Y TEMPORARY WOOD POLE FB

TEMPORARY WOOD POLE Sig AND Ltg

OH OH Sig HEAD ON OVERHEAD BUNDLE

OH OH OVERHEAD BUNDLE WITH 1#8(G) AND CONDUCTORS AS NOTED

TEMPORARY WOOD POLE Sig

TEMPORARY WOOD POLE

GENERATOR SYSTEM

TEMPORARY WOOD POLE Ltg

APPROVED FOR ELECTRICAL WORK ONLY

TEMPORARY SIGNAL SYSTEMS

E-1

REVISED BY	DATE REVISED
DN	07-27-21

CALCULATED-DESIGNED BY: DOUGLAS NDEITHI
CHECKED BY: BRYAN SABAGQUIT
FUNCTIONAL SUPERVISOR: ALI BAKHDOUD

STATE OF CALIFORNIA - DEPARTMENT OF TRANSPORTATION
Caltrans ELECTRICAL DESIGN

LAST REVISION 07-27-21 DATE PLOTTED => 9-SEP-2021 TIME PLOTTED => 11:24

DocuSign Envelope ID: EF8475C0-0470-4E52-B5B5-25D92AE11799

Dist	COUNTY	ROUTE	POST MILES TOTAL PROJECT	SHEET No.	TOTAL SHEETS
05	SCr	9	13.6/15.5		

REGISTERED ELECTRICAL ENGINEER DATE

PLANS APPROVAL DATE

THE STATE OF CALIFORNIA OR ITS OFFICERS OR AGENTS SHALL NOT BE RESPONSIBLE FOR THE ACCURACY OR COMPLETENESS OF SCANNED COPIES OF THIS PLAN SHEET.

REGISTERED PROFESSIONAL ENGINEER BRYAN SABAGQUIT No. E21616 Exp. 9/30/22 ELECTRICAL STATE OF CALIFORNIA

NOTES:

1. FOR ACCURATE RIGHT OF WAY DATA, CONTACT RIGHT OF WAY ENGINEERING AT THE DISTRICT OFFICE.
2. ALL PULL BOXES MUST BE No. 3½ UNLESS OTHERWISE NOTED.

SAN LORENZO RIVER BRIDGE (LOC 1)
PM 13.6

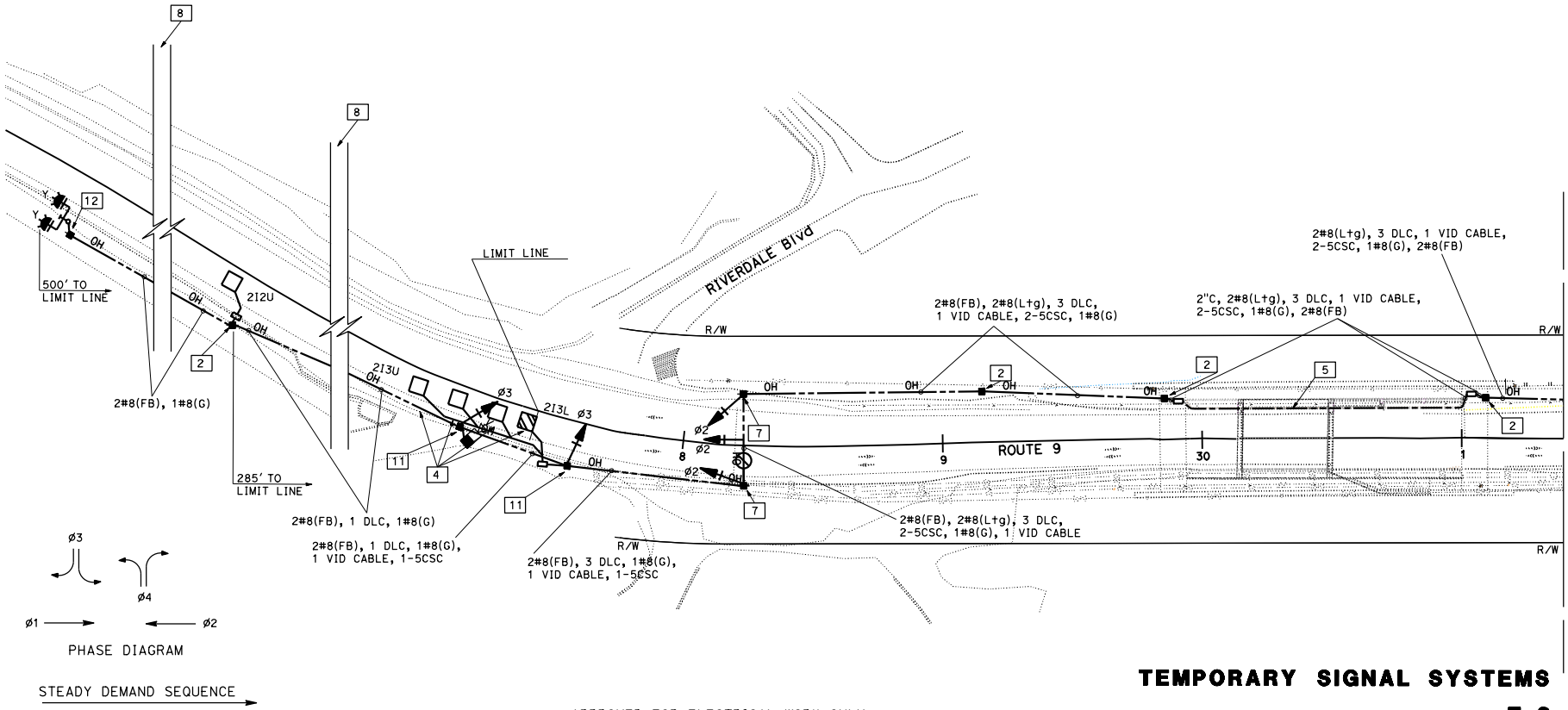

APPROVED FOR ELECTRICAL WORK ONLY

TEMPORARY SIGNAL SYSTEMS

SCALE: 1"=20'

E-2

STATE OF CALIFORNIA - DEPARTMENT OF TRANSPORTATION
Caltrans
ELECTRICAL DESIGN

FUNCTIONAL SUPERVISOR	CALCULATED-DESIGNED BY	DOUGLAS NDEITHI	REVISED BY	DN
ALI BAKHDOUD	CHECKED BY	BRYAN SABAGQUIT	DATE REVISED	07-27-21

LAST REVISION 07-27-21 | DATE PLOTTED => 9-SEP-2021 TIME PLOTTED => 11:24

DocuSign Envelope ID: EF8475C0-0470-4E52-B5B5-25D92AE11799

Dist	COUNTY	ROUTE	POST MILES TOTAL PROJECT	SHEET No.	TOTAL SHEETS
05	SCr	9	13.6/15.5		

REGISTERED ELECTRICAL ENGINEER DATE

PLANS APPROVAL DATE

THE STATE OF CALIFORNIA OR ITS OFFICERS OR AGENTS SHALL NOT BE RESPONSIBLE FOR THE ACCURACY OR COMPLETENESS OF SCANNED COPIES OF THIS PLAN SHEET.

REGISTERED PROFESSIONAL ENGINEER BRYAN SABAGQUIT No. E21616 Exp. 9/30/22 ELECTRICAL STATE OF CALIFORNIA

NOTES:

1. FOR ACCURATE RIGHT OF WAY DATA, CONTACT RIGHT OF WAY ENGINEERING AT THE DISTRICT OFFICE.
2. ALL PULL BOXES MUST BE No. 3½ UNLESS OTHERWISE NOTED.

SAN LORENZO RIVER BRIDGE (LOC 1)
PM 13.6

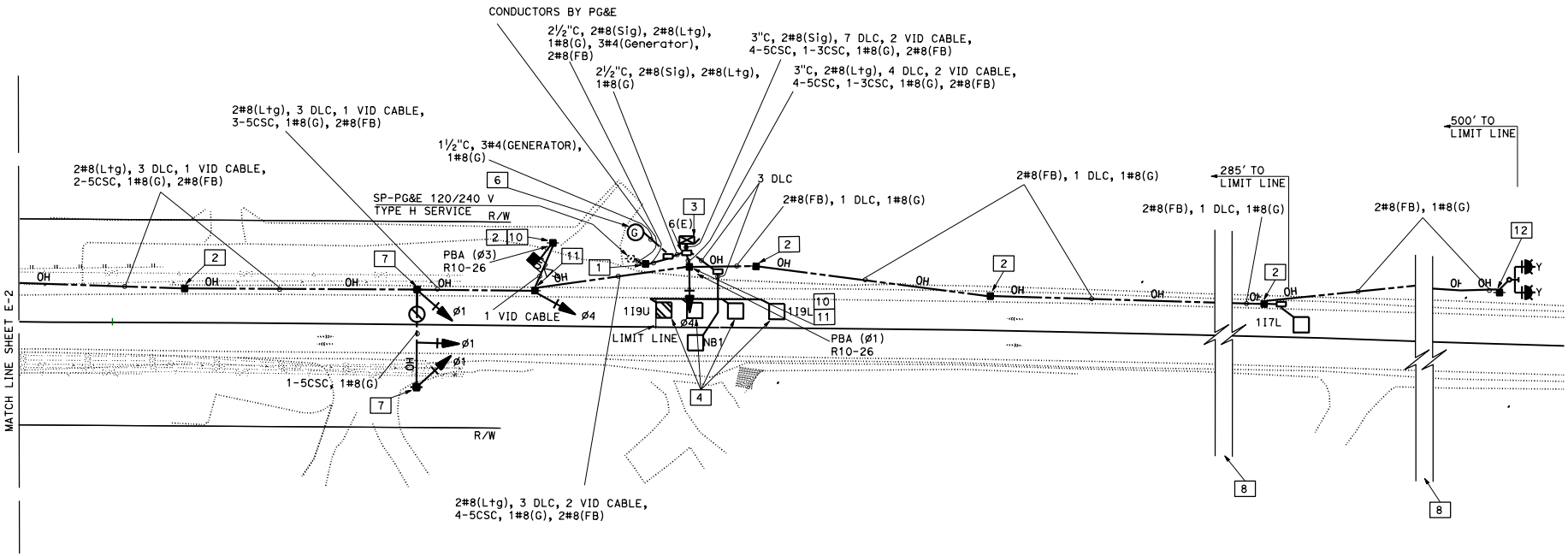

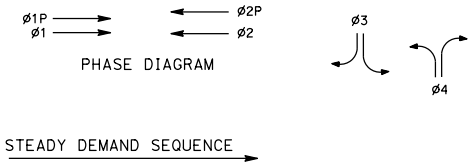

APPROVED FOR ELECTRICAL WORK ONLY

TEMPORARY SIGNAL SYSTEMS

SCALE: 1"=20'

E-3

STATE OF CALIFORNIA - DEPARTMENT OF TRANSPORTATION	FUNCTIONAL SUPERVISOR	CALCULATED-DESIGNED BY	REVISED BY	DATE REVISED
Caltrans ELECTRICAL DESIGN	ALI BAKHDOUD	DOUGLAS NDEITHI / BRYAN SABAGQUIT	DN	07-27-21
		CHECKED BY		

LAST REVISION 07-27-21 DATE PLOTTED => 9-SEP-2021 TIME PLOTTED => 11:24

DocuSign Envelope ID: EF8475C0-0470-4E52-B5B5-25D92AE11799

Dist	COUNTY	ROUTE	POST MILES TOTAL PROJECT	SHEET No.	TOTAL SHEETS
05	SCr	9	13.6/15.5		

REGISTERED ELECTRICAL ENGINEER DATE

PLANS APPROVAL DATE

THE STATE OF CALIFORNIA OR ITS OFFICERS OR AGENTS SHALL NOT BE RESPONSIBLE FOR THE ACCURACY OR COMPLETENESS OF SCANNED COPIES OF THIS PLAN SHEET.

REGISTERED PROFESSIONAL ENGINEER BRYAN SABAGQUIT No. E21616 Exp. 9/30/22 ELECTRICAL STATE OF CALIFORNIA

NOTE:

FOR ACCURATE RIGHT OF WAY DATA, CONTACT RIGHT OF WAY ENGINEERING AT THE DISTRICT OFFICE.

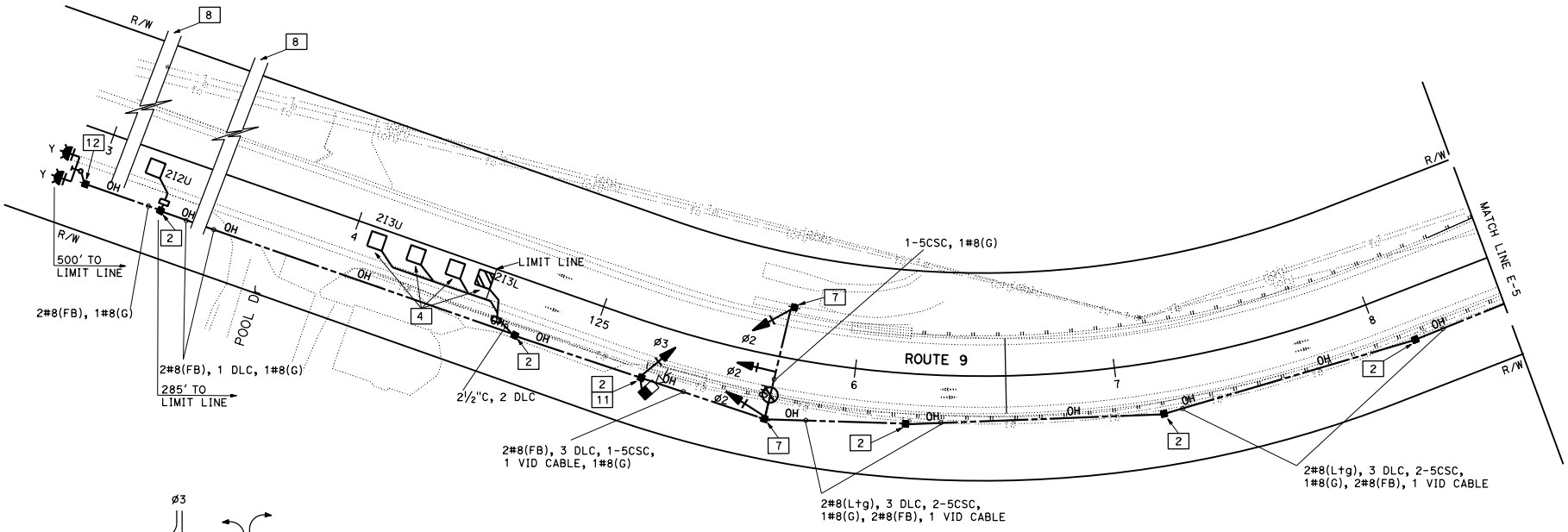

KINGS CREEK BRIDGE (LOC 2)
Br No. 36-0054 PM 15.5

APPROVED FOR ELECTRICAL WORK ONLY

TEMPORARY SIGNAL SYSTEMS

SCALE: 1"=20'

E-4

STATE OF CALIFORNIA - DEPARTMENT OF TRANSPORTATION
Caltrans
ELECTRICAL DESIGN

FUNCTIONAL SUPERVISOR	CALCULATED-DESIGNED BY	DOUGLAS NDEITHI	REVISED BY	DN
ALI BAKHDOUD	CHECKED BY	BRYAN SABAGQUIT	DATE REVISED	07-27-21

LAST REVISION 07-27-21 | DATE PLOTTED => 9-SEP-2021 | TIME PLOTTED => 11:24

DocuSign Envelope ID: EF8475C0-0470-4E52-B5B5-25D92AE11799

Dist	COUNTY	ROUTE	POST MILES TOTAL PROJECT	SHEET No.	TOTAL SHEETS
05	SCr	9	13.6/15.5		

REGISTERED ELECTRICAL ENGINEER DATE

PLANS APPROVAL DATE

THE STATE OF CALIFORNIA OR ITS OFFICERS OR AGENTS SHALL NOT BE RESPONSIBLE FOR THE ACCURACY OR COMPLETENESS OF SCANNED COPIES OF THIS PLAN SHEET.

REGISTERED PROFESSIONAL ENGINEER No. Exp. ELECTRICAL STATE OF CALIFORNIA

NOTE:

FOR ACCURATE RIGHT OF WAY DATA, CONTACT RIGHT OF WAY ENGINEERING AT THE DISTRICT OFFICE.

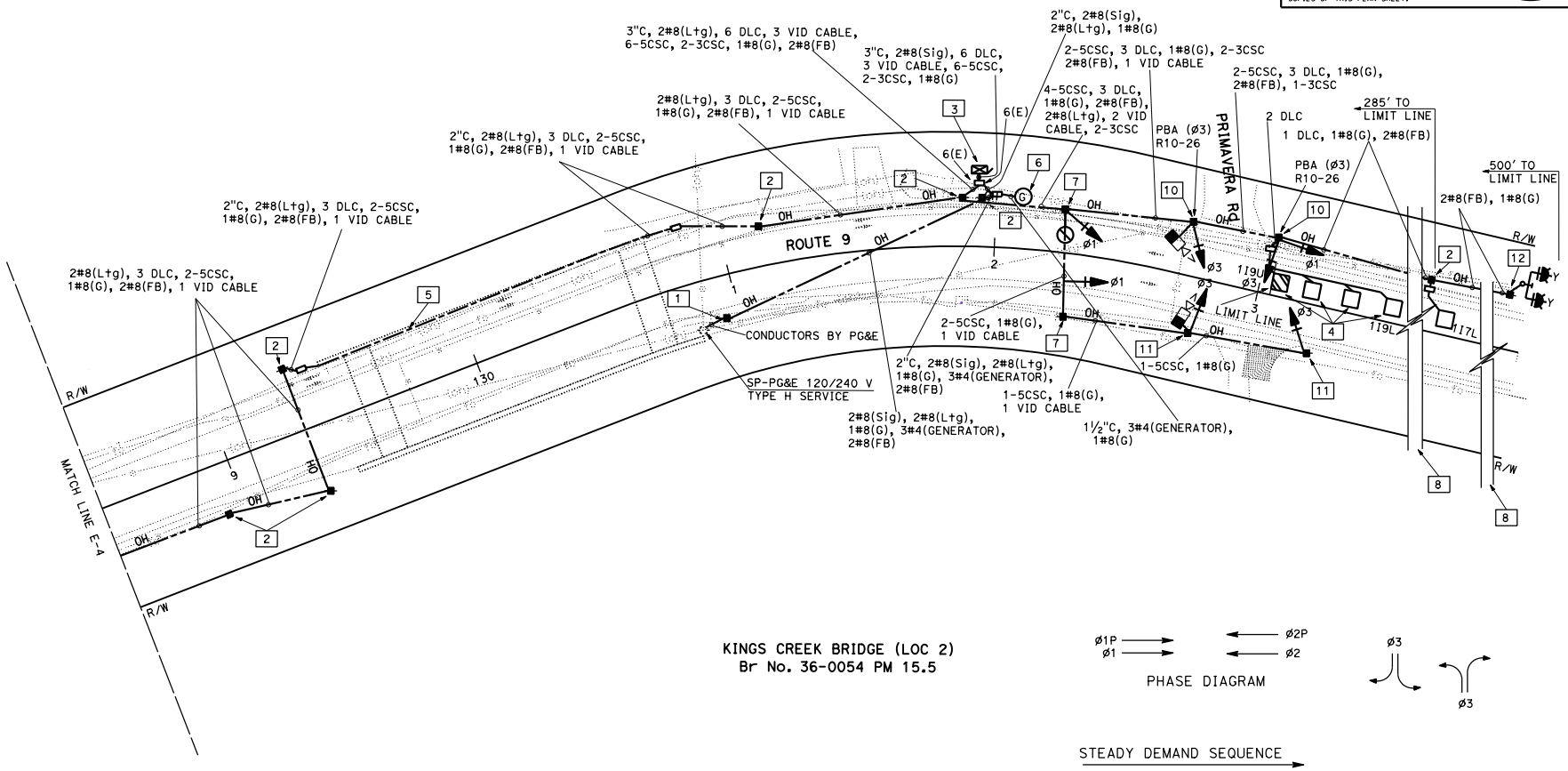

KINGS CREEK BRIDGE (LOC 2)
Br No. 36-0054 PM 15.5

PHASE DIAGRAM

STEADY DEMAND SEQUENCE

APPROVED FOR ELECTRICAL WORK ONLY

TEMPORARY SIGNAL SYSTEMS

E-5

STATE OF CALIFORNIA - DEPARTMENT OF TRANSPORTATION
Caltrans ELECTRICAL DESIGN

FUNCTIONAL SUPERVISOR | CALCULATED-DESIGNED BY | CHECKED BY | REVISED BY | DATE REVISED 07-27-21

LAST REVISION 07-27-21 | DATE PLOTTED => 9-SEP-2021 | TIME PLOTTED => 11:24

DocuSign Envelope ID: EF8475C0-0470-4E52-B5B5-25D92AE11799

Dist	COUNTY	ROUTE	POST MILES TOTAL PROJECT	SHEET No.	TOTAL SHEETS
05	SCr	9	13.6/15.5		??

REGISTERED ELECTRICAL ENGINEER DATE

PLANS APPROVAL DATE

THE STATE OF CALIFORNIA OR ITS OFFICERS OR AGENTS SHALL NOT BE RESPONSIBLE FOR THE ACCURACY OR COMPLETENESS OF SCANNED COPIES OF THIS PLAN SHEET.

REGISTERED PROFESSIONAL ENGINEER BRYAN SABAGQUIT No. E21616 Exp. 9/30/22 ELECTRICAL STATE OF CALIFORNIA

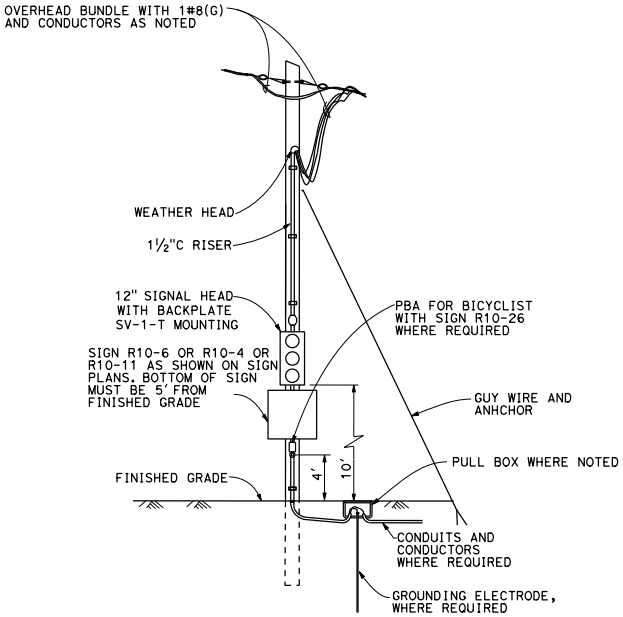

TEMPORARY WOOD POLE Sig
DETAIL A

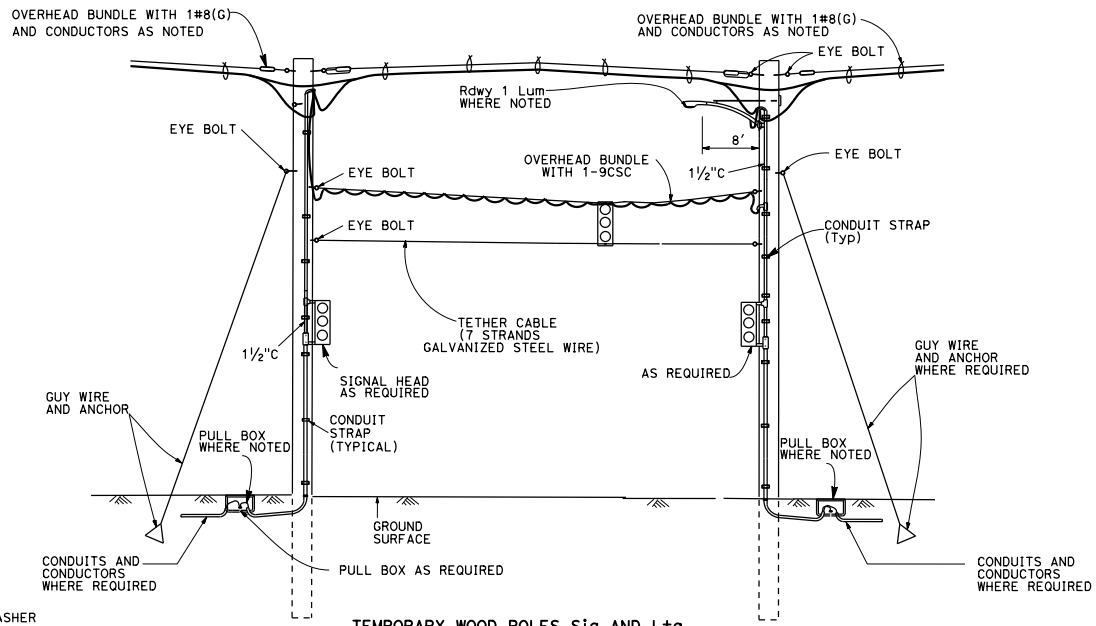

TEMPORARY WOOD POLES Sig AND Ltg
DETAIL B

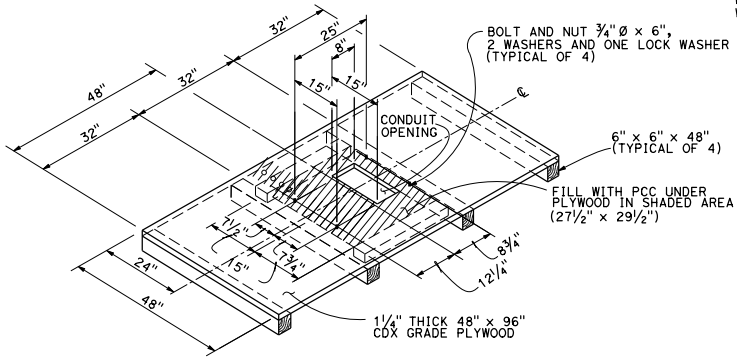

CABINET PLATFORM
DETAIL C

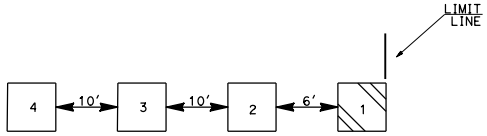

LOOP DETECTORS PLACEMENT
DETAIL D

ELECTRICAL DETAILS
NO SCALE
ED-1

STATE OF CALIFORNIA - DEPARTMENT OF TRANSPORTATION
Caltrans® **ELECTRICAL DESIGN**

FUNCTIONAL SUPERVISOR	CALCULATED-DESIGNED BY	DOUGLAS NDEITHI	REVISED BY	DN
ALI BAKHDOUD	CHECKED BY	BRYAN SABAGQUIT	DATE REVISED	07-27-21

LAST REVISION 07-27-21 DATE PLOTTED => 9-SEP-2021 TIME PLOTTED => 11:24

DocuSign Envelope ID: EF8475C0-0470-4E52-B5B5-25D92AE11799

Dist	COUNTY	ROUTE	POST MILES TOTAL PROJECT	SHEET No.	TOTAL SHEETS
05	SCr	9	13.6/15.5		??

REGISTERED ELECTRICAL ENGINEER DATE

PLANS APPROVAL DATE

REGISTERED PROFESSIONAL ENGINEER BRYAN SABAGQUIT No. E21616 Exp. 9/30/22 ELECTRICAL STATE OF CALIFORNIA

THE STATE OF CALIFORNIA OR ITS OFFICERS OR AGENTS SHALL NOT BE RESPONSIBLE FOR THE ACCURACY OR COMPLETENESS OF SCANNED COPIES OF THIS PLAN SHEET.

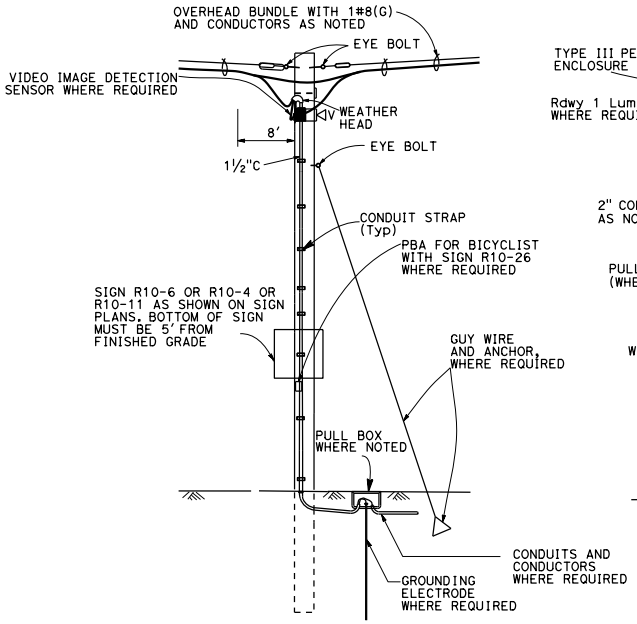

TEMPORARY WOOD POLE
DETAIL E

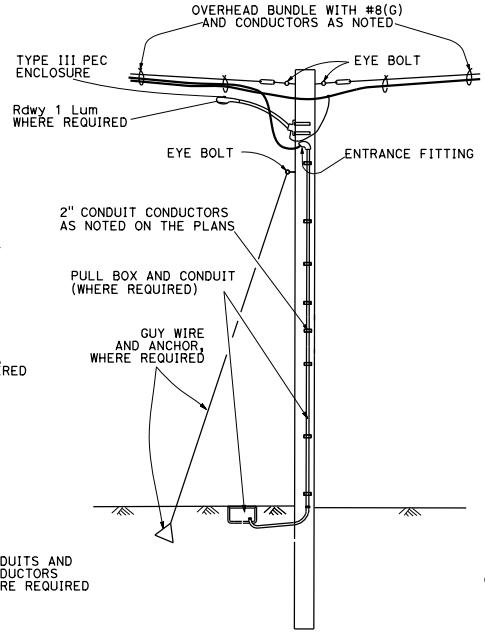

TEMPORARY WOOD POLE Ltg
DETAIL F

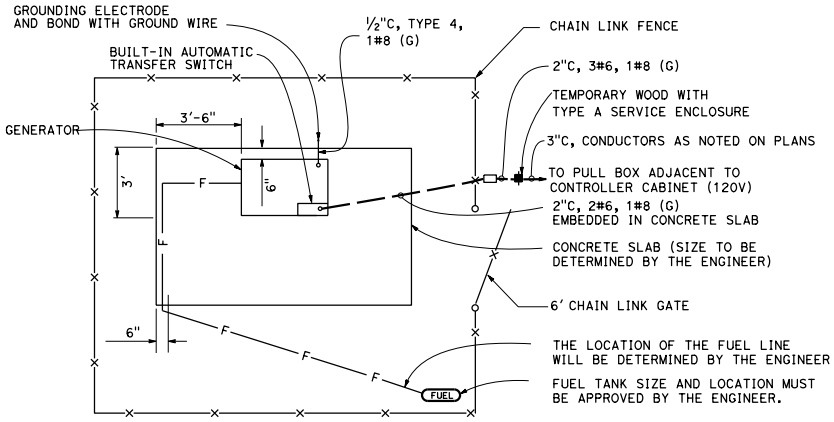

GENERATOR SYSTEM
DETAIL G

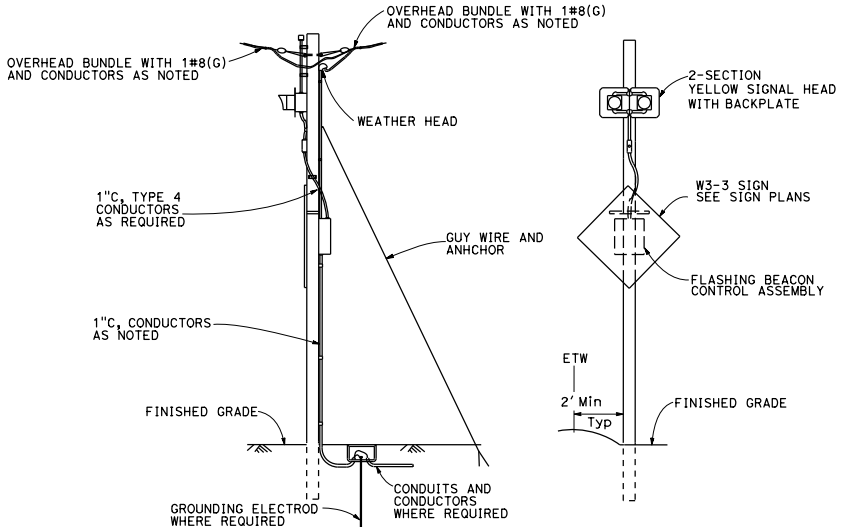

TEMPORARY WOOD POLES FB
DETAIL H

ELECTRICAL DETAILS
NO SCALE
ED-2

STATE OF CALIFORNIA - DEPARTMENT OF TRANSPORTATION
Caltrans
ELECTRICAL DESIGN

FUNCTIONAL SUPERVISOR	CALCULATED-DESIGNED BY	REVISED BY	DATE REVISED
ALI BAKHDOUD	DOUGLAS NDEITHI	DN	07-27-21
	BRYAN SABAGQUIT		
	CHECKED BY		

LAST REVISION 07-27-21 DATE PLOTTED => 9-SEP-2021 TIME PLOTTED => 11:24

DocuSign Envelope ID: EF8475C0-0470-4E52-B5B5-25D92AE11799

Dist	COUNTY	ROUTE	POST MILES TOTAL PROJECT	SHEET No.	TOTAL SHEETS
05	SCr	9	13.6/15.5		??

REGISTERED ELECTRICAL ENGINEER DATE

PLANS APPROVAL DATE

THE STATE OF CALIFORNIA OR ITS OFFICERS OR AGENTS SHALL NOT BE RESPONSIBLE FOR THE ACCURACY OR COMPLETENESS OF SCANNED COPIES OF THIS PLAN SHEET.

REGISTERED PROFESSIONAL ENGINEER BRYAN SABAGQUIT No. E21616 Exp. 9/30/22 ELECTRICAL STATE OF CALIFORNIA

NOTES:

ELECTRICAL SYSTEM QUANTITY TABLES SUMMARIZE SIGNIFICANT COMPONENTS.
SEE ELECTRICAL SYSTEMS PLANS AND SPECIFICATIONS TO DETERMINE ALL MATERIALS NEEDED FOR EACH SYSTEM.

ABBREVIATIONS:

Cu	COPPER
VID	VIDEO IMAGE DETECTION

TEMPORARY SIGNAL SYSTEMS

SHEET No.	No. 3-1/2 PB	No. 6(E) PB	DETECTOR LOOP, TYPE A	DETECTOR LOOP, TYPE D	DETECTOR-STUB SHOULDER	1-1/2"C, TYPE 3	2"C, TYPE 3	2-1/2"C, TYPE 3	3"C, TYPE 3	No. 8 CONDUCTOR (Cu)	No. 4 CONDUCTOR (Cu)	No. 8 CONDUCTOR (G) (Cu)	PULL ROPE	9CSC	3CSC	DLC
	EA					LF										
E-2	4		4	1	5		131			2164		680	680	402	402	1560
E-3	3	1	5	1	5	13	15	23	10	1840	52	811	811	660	465	250
E-4	2		4	1	5			12		1770		555	555	470	370	2265
E-5	6	1	4	1	5	5	200		12	2400	15	865	865	750	392	1985

(N) - NOT A SEPARATE BID ITEM

TEMPORARY SIGNAL SYSTEMS

SHEET No.	STANDARD- TYPE 30/30-SB W/ 15' LMA	LUMINAIRE - 235W LED	PPB POST W/ FLANGE & BOLTS (10')	APS PPB ASSEMBLY	FB CONTROLLER (FBCA)	FB SIGN LIGHTING FIXTURE	FB TYPE 15-FBS POLE	FB TYPE 15-FBS FOUNDATION	TYPE III-A SERVICE ENCLOSURE	TYPE PGE SERVICE RISER	WOOD POLE- 30'	WOOD POLE MASTARM- 8FT	CONTROLLER 332/334 FOUNDATION WITH ANCHOR BOLTS	CONTROLLER CABINET	VDS - CAMERA ASSEMBLY	VDS - CAMERA BRACKET (STANDARD MOUNT)	VDS - PROCESSOR - 1 CAMERA INPUT	VDS - MODULE - 2 CHANNEL	VDS - SURGE PANEL	MESSENGER WIRE- 16MM	SPAN WIRE- 8MM (7 STRAND)	VDS - COAX CABLE, BELDEN 8281	VDS - POWER CABLE, 3 CONDUCTOR #16
	EA																			LF			
E-2	1	1	1	1	1	1	1	1			8	1			1	1	1	1	1	128	555	472	472
E-3	1	1	2	2	1	1	1	1	1	1	12	1	1	1	1	1	1	1	1	192	810	91	91
E-4	1	1			1	1	1	1			7	1								112	595		
E-5	1	1	2	2	2	1	1	1	1	1	16	1	1	1	1	1	1	1	1	256	660	230	230

(N) - NOT A SEPARATE BID ITEM

ELECTRICAL SYSTEMS QUANTITIES
EQ-1

STATE OF CALIFORNIA - DEPARTMENT OF TRANSPORTATION
Caltrans® ELECTRICAL DESIGN

FUNCTIONAL SUPERVISOR	CALCULATED-DESIGNED BY	DOUGLAS NDEITHI	REVISED BY	DN
ALI BAKHDOUD	CHECKED BY	BRYAN SABAGQUIT	DATE REVISED	07-27-21

LAST REVISION 07-27-21 DATE PLOTTED => 9-SEP-2021 TIME PLOTTED => 11:24

DocuSign Envelope ID: EF8475C0-0470-4E52-B5B5-25D92AE11799

Dist	COUNTY	ROUTE	POST MILES TOTAL PROJECT	SHEET No.	TOTAL SHEETS

REGISTERED CIVIL ENGINEER X DATE

PLANS APPROVAL DATE

REGISTERED PROFESSIONAL ENGINEER Joey M Aquino III No. 58386 Exp. 12-31-22 CIVIL STATE OF CALIFORNIA

THE STATE OF CALIFORNIA OR ITS OFFICERS OR AGENTS SHALL NOT BE RESPONSIBLE FOR THE ACCURACY OR COMPLETENESS OF SCANNED COPIES OF THIS PLAN SHEET.

INCOMPLETE PLAN FOR DESIGN STUDY
PRINTED DATE: 3-DEC-2021
Office of Structure Design
STATE OF CALIFORNIA

CHECKED DETAILS

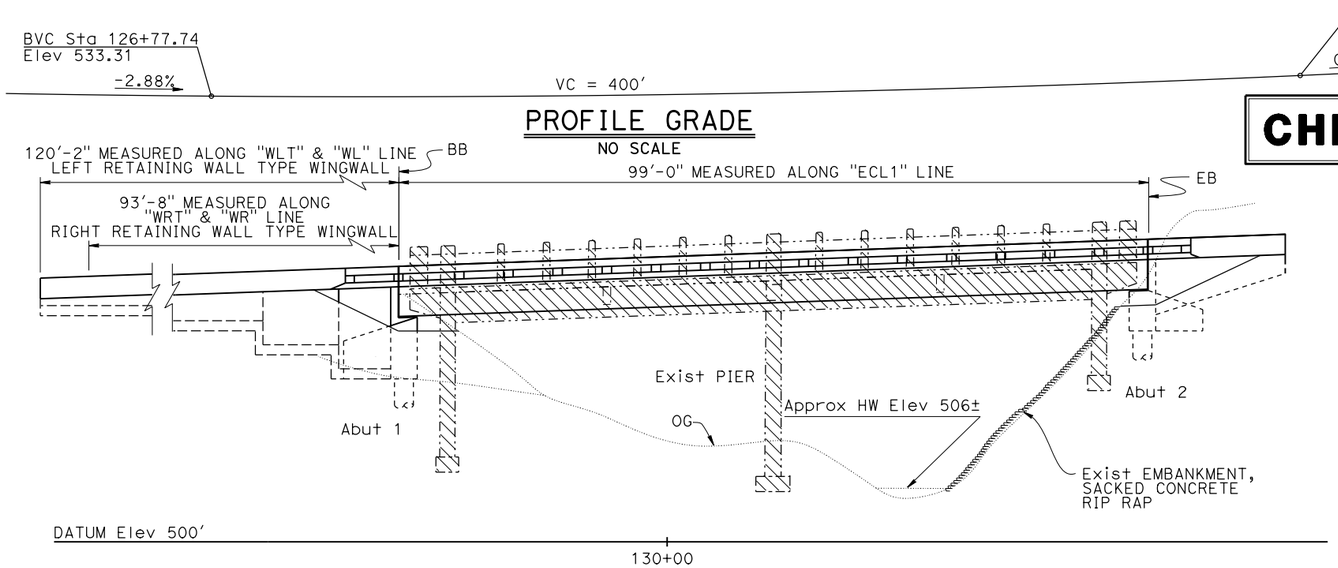

PROFILE GRADE
NO SCALE

ELEVATION
1" = 10'

LEGEND:

- Existing structure (Br#36-0054)
- Limits of stage 1 Bridge removal
- Limits of stage 2 Bridge removal
- * Polyester concrete overlay thickness not included

NOTES:

1. Paint "KINGS CREEK BRIDGE " "Br. No. 36-0125", year constructed
2. Concrete Barrier Type 85 (Mod)
3. Temporary Railing (Type K), see Roadway Plans
4. Polyester Concrete Overlay (1")
5. Structure Approach Type EQ (10)
6. Scuppers (10'-0" Spacing)
7. Deck Drains Type D-2 (Mod)

For "QUANTITIES", "GENERAL NOTES", "INDEX TO PLANS", "STANDARD PLANS" and "PILE DATA TABLE", see "INDEX TO PLANS" sheet

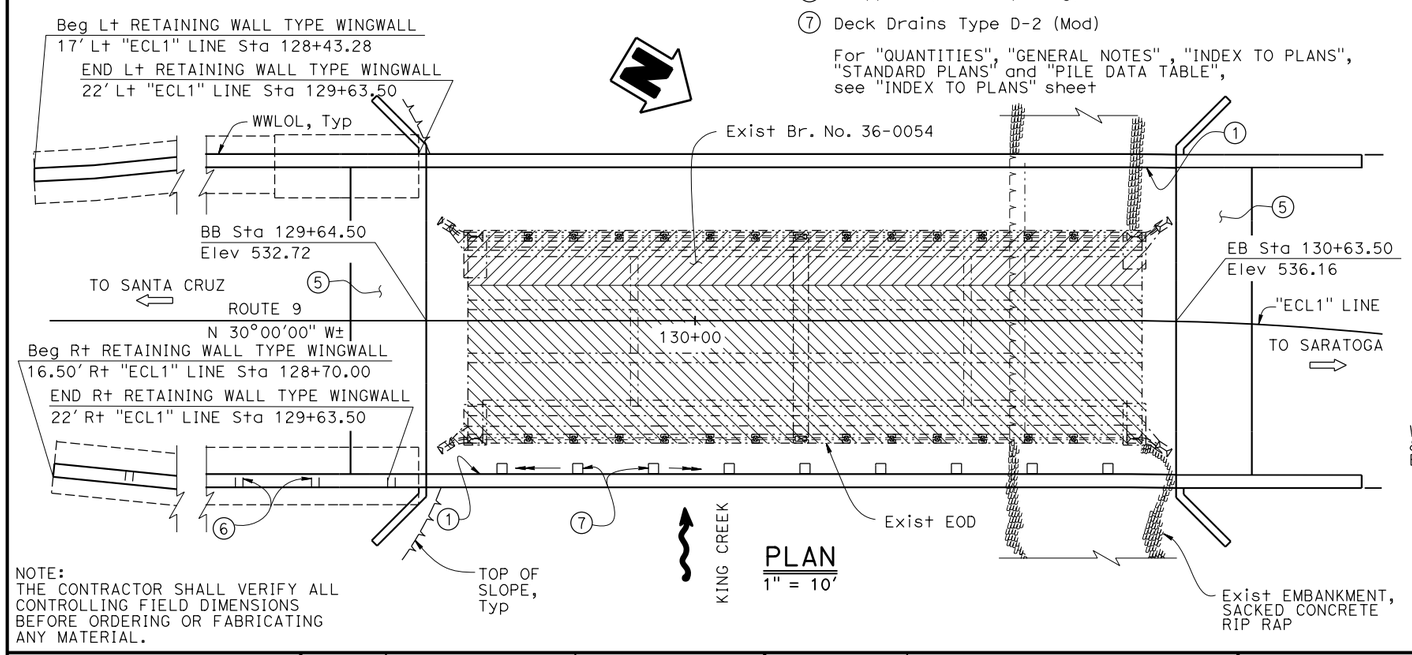

PLAN
1" = 10'

NOTE:
THE CONTRACTOR SHALL VERIFY ALL CONTROLLING FIELD DIMENSIONS BEFORE ORDERING OR FABRICATING ANY MATERIAL.

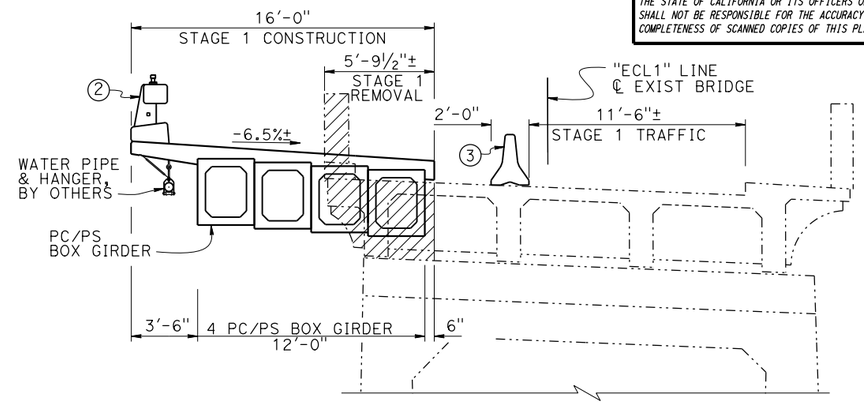

STAGE 1

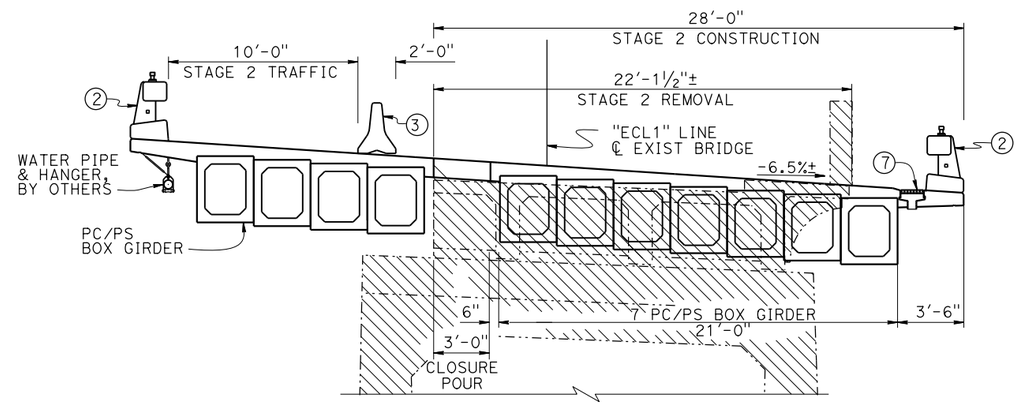

STAGE 2

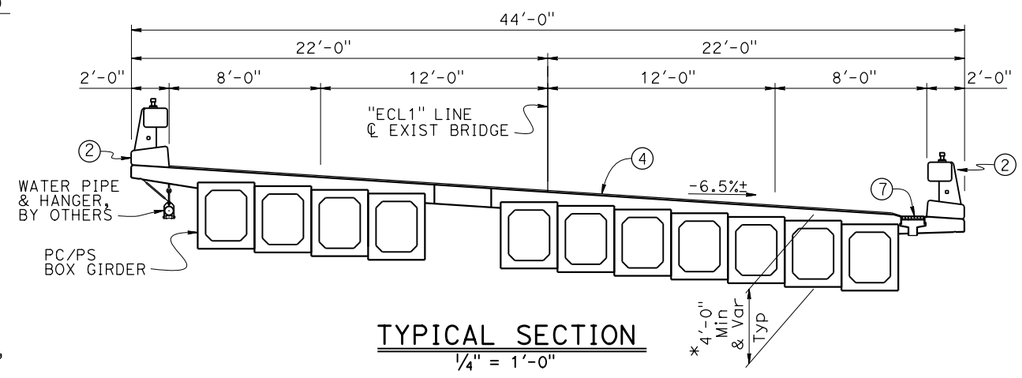

TYPICAL SECTION
¼" = 1'-0"

DESIGN	BY Quang Nguyen	CHECKED Alireza Yazdani Motlagh	LOAD & RESISTANCE FACTOR DESIGN	LIVE LOADING HL93 W/"LOW-BOY" & PERMIT DESIGN VEHICLE
DETAILS	BY Shadi Motalebi	CHECKED Alireza Yazdani Motlagh	LAYOUT BY Shadi Motalebi	CHECKED Quang Nguyen
QUANTITIES	BY Joey Aquino	CHECKED Jacqueline Koyama	SPECIFICATIONS BY X	PLANS AND SPECS COMPARED X

Joseph E Downing
BRANCH CHIEF

STATE OF CALIFORNIA
DEPARTMENT OF TRANSPORTATION

DIVISION OF ENGINEERING SERVICES
BRIDGE DESIGN
BRANCH 3

BRIDGE No. 36-0125
POST MILE 15.49

KINGS CREEK BRIDGE (REPLACE)
GENERAL PLAN

STRUCTURES DESIGN GENERAL PLAN SHEET (ENGLISH) (REVISION 3/10/2021)

DATE PLOTTED => 3-DEC-2021 TIME PLOTTED => 16:03
FILE => 36-0125-a-gp.dgn USERNAME => s136540

ORIGINAL SCALE IN INCHES FOR REDUCED PLANS 0 1 2 3

UNIT: 3578
PROJECT NUMBER & PHASE: 05160000781

COUNTY/ROUTE: Scr/9
CONTRACT No.: 05-1H4704

DISREGARD PRINTS BEARING EARLIER REVISION DATES

REVISION DATES: 3-11-21

SHEET 1 OF X

DocuSign Envelope ID: EF8475C0-0470-4E52-B5B5-25D92AE11799

Dist	COUNTY	ROUTE	POST MILES TOTAL PROJECT	SHEET No.	TOTAL SHEETS

INCOMPLETE PLAN FOR DESIGN STUDY
PRINTED DATE: 3-DEC-2021
Office of Structure Design
STATE OF CALIFORNIA

REGISTERED CIVIL ENGINEER X DATE

PLANS APPROVAL DATE

REGISTERED PROFESSIONAL ENGINEER Joey M Aquino III No. 58386 Exp. 12-31-22 CIVIL STATE OF CALIFORNIA

THE STATE OF CALIFORNIA OR ITS OFFICERS OR AGENTS SHALL NOT BE RESPONSIBLE FOR THE ACCURACY OR COMPLETENESS OF SCANNED COPIES OF THIS PLAN SHEET.

GENERAL NOTES
LOAD AND RESISTANCE FACTOR DESIGN

DESIGN:
AASHTO LRFD Bridge Design Specifications, 2017 8th edition with California Amendments, preface dated April 2019

SEISMIC DESIGN:
Caltrans Seismic Design Criteria (SDC), Version 2.0 dated April 2019
See SITE SPECIFIC ARS CURVE

DEAD LOAD:
Includes 35 psf for future wearing surface

LIVE LOADING:
HL93 and permit design load
Permit Load not allowed during Stage 1 construction

REINFORCED CONCRETE:
fy = 60 ksi
f'c = 3.6 ksi
n = 8

PRESTRESSING STEEL:
See "PRESTRESSING NOTES" on "PC/PS BOX GIRDER DETAILS No. 1" sheet

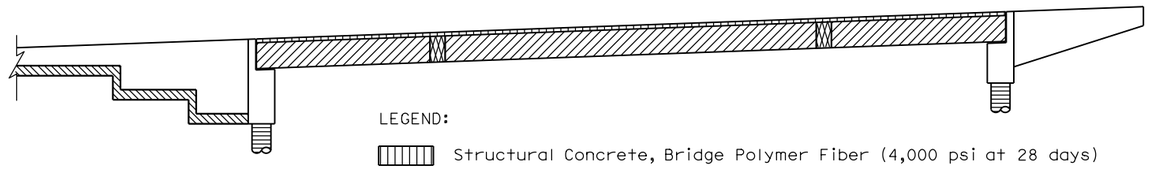

LEGEND:

- Structural Concrete, Bridge Polymer Fiber (4,000 psi at 28 days)
- PC/PS Box Girder, see "PC/PS BOX GIRDER LAYOUT" sheet
- Cast in Drill Hole Concrete Pile
- Structural Concrete, Bridge
- Structural Concrete, Bridge, Closure Pour, see "PC/PS BOX GIRDER LAYOUT" sheet
- Structural Concrete, Bridge Footing

CONCRETE STRENGTH AND TYPE LIMITS
No Scale

INDEX TO PLANS

SHEET No.	TITLE
1	GENERAL PLAN
2	INDEX TO PLANS
3	DECK CONTOURS
4	FOUNDATION PLAN
5	ABUTMENT 1 LAYOUT
6	ABUTMENT 2 LAYOUT
7	ABUTMENT DETAILS No. 1
8	ABUTMENT DETAILS No. 2
9	ABUTMENT DETAILS No. 3
10	RETAINING WALL LAYOUT No. 1
11	RETAINING WALL LAYOUT No. 2
12	TYPICAL SECTION
13	PC/PS BOX GIRDER LAYOUT
14	PC/PS BOXGIRDER DETAILS No. 1
15	PC/PS BOXGIRDER DETAILS No. 2
16	PC/PS BOXGIRDER DETAILS No. 3
17	BRIDGE REMOVAL DETAILS No. 1
18	BRIDGE REMOVAL DETAILS No. 2
19	LOG OF TEST BORINGS No. 1 OF 3
20	LOG OF TEST BORINGS No. 2 OF 3
21	LOG OF TEST BORINGS No. 3 OF 3

PILE DATA TABLE

Location	Pile Type	Nominal Resistance (kips)		Pile Cut-Off Elevation (ft)	Design Tip Elevations (ft)	Specified Tip Elevation (ft)
		Compression	Tension			
Abutment 1	30" Ø CIDH	400	0.0	522.4	500(a)	500
Abutment 2	30" Ø CIDH	400	0.0	525.4	500.4(a)	500.4

NOTES:
1. Design tip elevations are controlled by: (a) Compression Strength Limit State
2. The CIDH Specified Tip Elevation shall not be raised

STANDARD PLANS DATED 2018

A10A	ABBREVIATIONS (SHEET 1 OF 2)
A10B	ABBREVIATIONS (SHEET 2 OF 2)
A10C	LINES AND SYMBOLS (SHEET 1 OF 3)
A10D	LINES AND SYMBOLS (SHEET 2 OF 3)
A10E	LINES AND SYMBOLS (SHEET 3 OF 3)
A10F	LEGEND - SOIL (SHEET 1 OF 2)
A10G	LEGEND - SOIL (SHEET 2 OF 2)
A10H	LEGEND - ROCK
A62C	LIMITS OF PAYMENT FOR EXCAVATION AND BACKFILL BRIDGE
B0-1	BRIDGE DETAILS
B0-3	BRIDGE DETAILS
B0-5	BRIDGE DETAILS
B0-13	BRIDGE DETAILS
B3-1A	RETAINING WALL TYPE 1 (CASE 1)
B6-21	JOINT SEALS (MAXIMUM MOVEMENT RATING = 2")
B7-6	DECK DRAINS - TYPES D-1 AND D-2
B9-4	STRUCTURE APPROACH TYPE EQ (10)
RSP B11-83	CONCRETE BARRIER TYPE 85 DETAILS No. 1
RSP B11-84	CONCRETE BARRIER TYPE 85 DETAILS No. 2
RSP B11-85	CONCRETE BARRIER TYPE 85 DETAILS No. 3

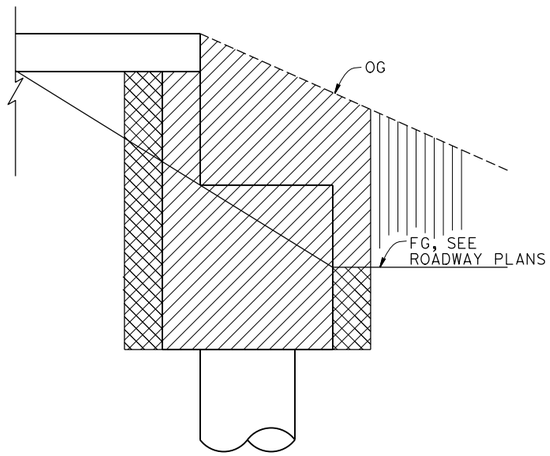

LEGEND:

- Structure Excavation
- Structure Backfill
- Roadway Excavation

LIMITS OF EXCAVATION AND BACKFILL
NO SCALE

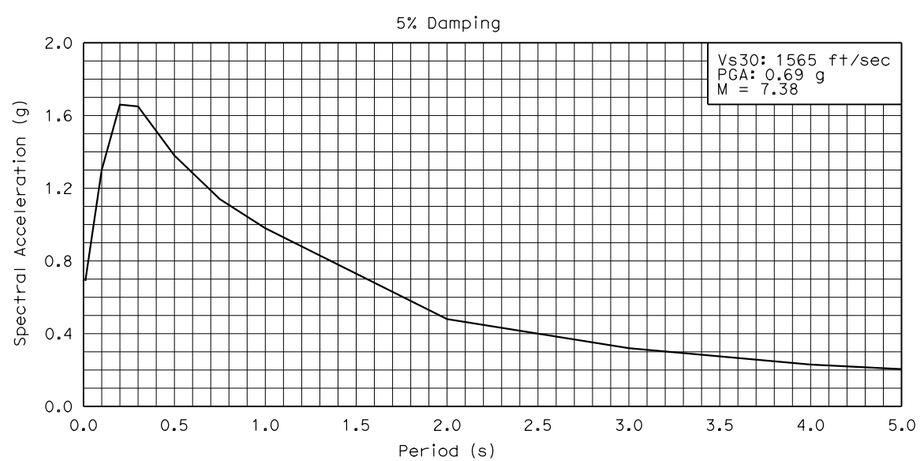

SITE SPECIFIC ARS CURVE
NO SCALE

STANDARD PLAN SHEET No.
DETAIL No.

	BY	CHECKED
DESIGN	Quang Nguyen	Alireza Yazdani Motlagh
DETAILS	Shadi Motalebi	Alireza Yazdani Motlagh
QUANTITIES	Joey Aquino	Jacqueline Koyama

STATE OF CALIFORNIA DEPARTMENT OF TRANSPORTATION

DIVISION OF ENGINEERING SERVICES BRIDGE DESIGN BRANCH 3

BRIDGE No. 36-0125
POST MILE 15.49

KINGS CREEK BRIDGE (REPLACE)
INDEX TO PLANS

STRUCTURES DESIGN DETAIL SHEET (ENGLISH) (REVISION 3/10/2021)

DATE PLOTTED => 3-DEC-2021 TIME PLOTTED => 16:03
FILE => 36-0125-a-itp.dgn USERNAME => s136540

ORIGINAL SCALE IN INCHES FOR REDUCED PLANS 0 1 2 3

UNIT: 3578
PROJECT NUMBER & PHASE: 05160000781

COUNTY/ROUTE: Scr/9
CONTRACT No.: 05-1H4704

DISREGARD PRINTS BEARING EARLIER REVISION DATES

REVISION DATES: 5-14-21

SHEET X OF X

DocuSign Envelope ID: EF8475C0-0470-4E52-B5B5-25D92AE11799

Dist	COUNTY	ROUTE	POST MILES TOTAL PROJECT	SHEET No.	TOTAL SHEETS

REGISTERED CIVIL ENGINEER X DATE

PLANS APPROVAL DATE

REGISTERED PROFESSIONAL ENGINEER Joey M Aquino III No. 58386 Exp. 12-31-22 CIVIL STATE OF CALIFORNIA

THE STATE OF CALIFORNIA OR ITS OFFICERS OR AGENTS SHALL NOT BE RESPONSIBLE FOR THE ACCURACY OR COMPLETENESS OF SCANNED COPIES OF THIS PLAN SHEET.

HYDROLOGIC SUMMARY

Drainage Area: 7.7 mi^2

	Design Flood	Base Flood	Overtopping Flood/ Flood of Record
Frequency	50-yr	100-yr	N/A
Discharge	2020 cfs	2360 cfs	N/A
Water Surface Elevation at Bridge	518.14 ft	520.12 ft	N/A

Flood plain data are based upon information available when the plans were prepared and are shown to meet federal requirements. The accuracy of said information is not warranted by the State and interested or affected parties should make their own investigation.

SCOUR DATA TABLE

Support Location	Long Term (Degradation and Contraction) Scour Elevation (ft)*	Short Term (Local) Scour Depth (ft)
Abut 1	530.00	0.00
Abut 2	535.00	0.00

* There is no anticipated degradation or contraction scour; this is the approximate ground elevation

No. #	R	Δ	T	L
1	410.00	07°32'49"	23.08	46.10
2	350.00	34°15'30"	107.87	209.27

SOFFIT ELEVATIONS

1 - 527.86
2 - 529.70
3 - 531.59
4 - 527.70
5 - 529.17
6 - 530.15

NOTE:

Existing utilities in conflict will be relocated by others prior to bridge construction

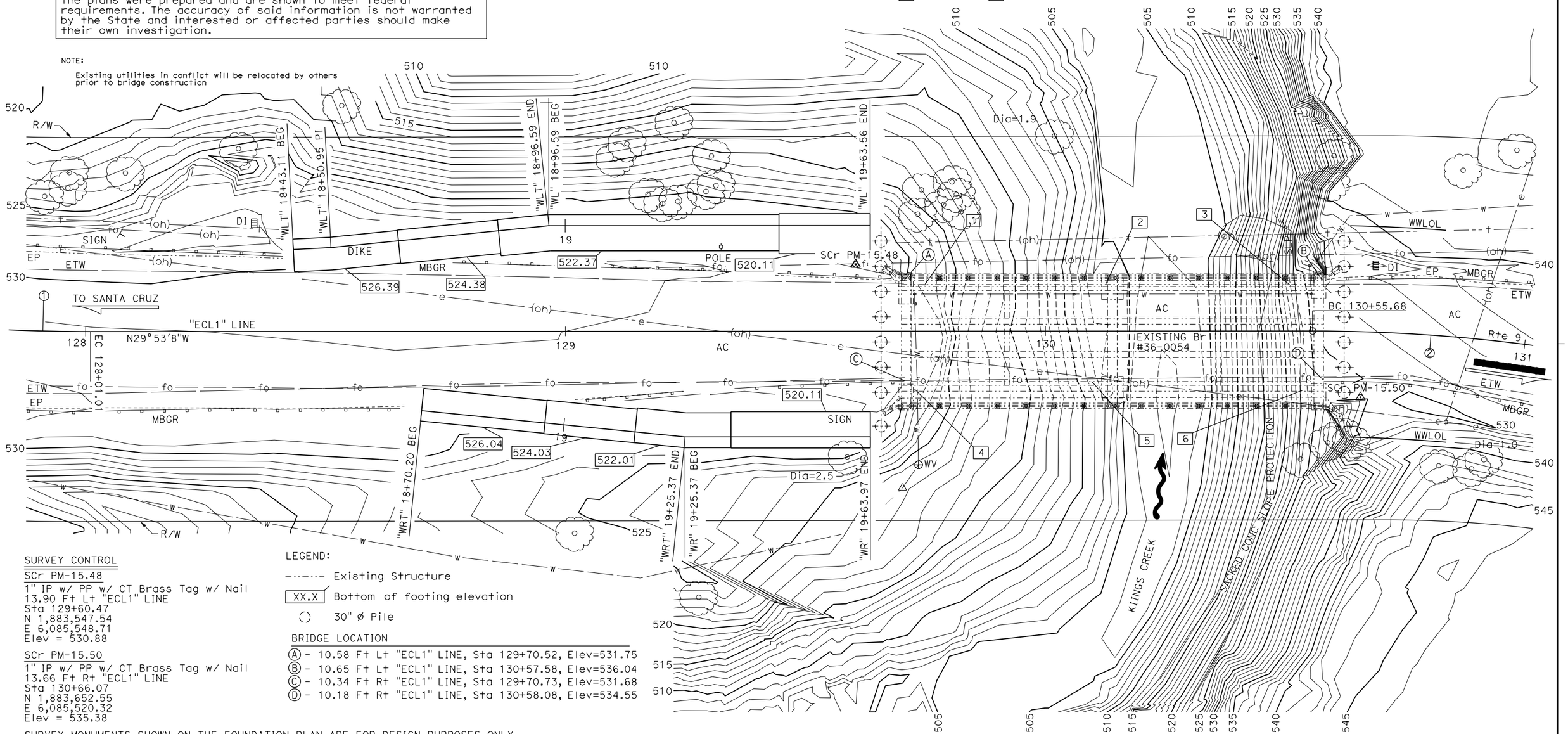

SURVEY CONTROL

SCr PM-15.48
1" IP w/ PP w/ CT Brass Tag w/ Nail
13.90 Ft Lt "ECL1" LINE
Sta 129+60.47
N 1,883,547.54
E 6,085,548.71
Elev = 530.88

SCr PM-15.50
1" IP w/ PP w/ CT Brass Tag w/ Nail
13.66 Ft Rt "ECL1" LINE
Sta 130+66.07
N 1,883,652.55
E 6,085,520.32
Elev = 535.38

LEGEND:

Existing Structure
XX.X Bottom of footing elevation
30" ø Pile

BRIDGE LOCATION

Ⓐ - 10.58 Ft Lt "ECL1" LINE, Sta 129+70.52, Elev=531.75
Ⓑ - 10.65 Ft Lt "ECL1" LINE, Sta 130+57.58, Elev=536.04
Ⓒ - 10.34 Ft Rt "ECL1" LINE, Sta 129+70.73, Elev=531.68
Ⓓ - 10.18 Ft Rt "ECL1" LINE, Sta 130+58.08, Elev=534.55

SURVEY MONUMENTS SHOWN ON THE FOUNDATION PLAN ARE FOR DESIGN PURPOSES ONLY. FOR COMPLETE LIST OF SURVEY MONUMENTS FOR THIS PROJECT, SEE ROADWAY PLANS.

PRELIMINARY INVESTIGATIONS BRANCH

SCALE: 1" = 10'	VERT. DATUM: NAVD88	SURVEYED	BY DISTRICT	CHECKED H. PEREZ
	HORIZ. DATUM: NAD83 (1991.35)	DRAFTED	BY S. ZHENG	CHECKED E. GONZALES

	BY	CHECKED
DESIGN	Quang Nguyen	Alireza Yazdani Motlagh
DETAILS	Shadi Motalebi	Alireza Yazdani Motlagh
QUANTITIES	Joey Aquino	Jacqueline Koyama

STATE OF CALIFORNIA DEPARTMENT OF TRANSPORTATION

DIVISION OF ENGINEERING SERVICES BRIDGE DESIGN BRANCH 3

BRIDGE No. 36-0125
POST MILE 15.49

KINGS CREEK BRIDGE (REPLACE)
FOUNDATION PLAN

STRUCTURES FOUNDATION PLAN SHEET (ENGLISH) (REVISION 4/21/2021)

DATE PLOTTED => 3-DEC-2021 TIME PLOTTED => 16:03
FILE => 36-0125-e-fp101-revised.dgn USERNAME => s136540
ORIGINAL SCALE IN INCHES FOR REDUCED PLANS 0 1 2 3

UNIT: 3646
PROJECT NUMBER & PHASE: 05160000781

COUNTY/ROUTE: SCr/009
CONTRACT No.: 05-1H4704

DISREGARD PRINTS BEARING EARLIER REVISION DATES

REVISION DATES 04/28/21

SHEET X OF X

DocuSign Envelope ID: EF8475C0-0470-4E52-B5B5-25D92AE11799

INCOMPLETE PLAN FOR DESIGN STUDY
PRINTED DATE: 3-DEC-2021
Office of Structure Design
STATE OF CALIFORNIA

Dist	COUNTY	ROUTE	POST MILES TOTAL PROJECT	SHEET No.	TOTAL SHEETS

REGISTERED CIVIL ENGINEER X DATE

PLANS APPROVAL DATE

REGISTERED PROFESSIONAL ENGINEER Joey M Aquino III No. 58386 Exp. 12-31-22 CIVIL STATE OF CALIFORNIA

THE STATE OF CALIFORNIA OR ITS OFFICERS OR AGENTS SHALL NOT BE RESPONSIBLE FOR THE ACCURACY OR COMPLETENESS OF SCANNED COPIES OF THIS PLAN SHEET.

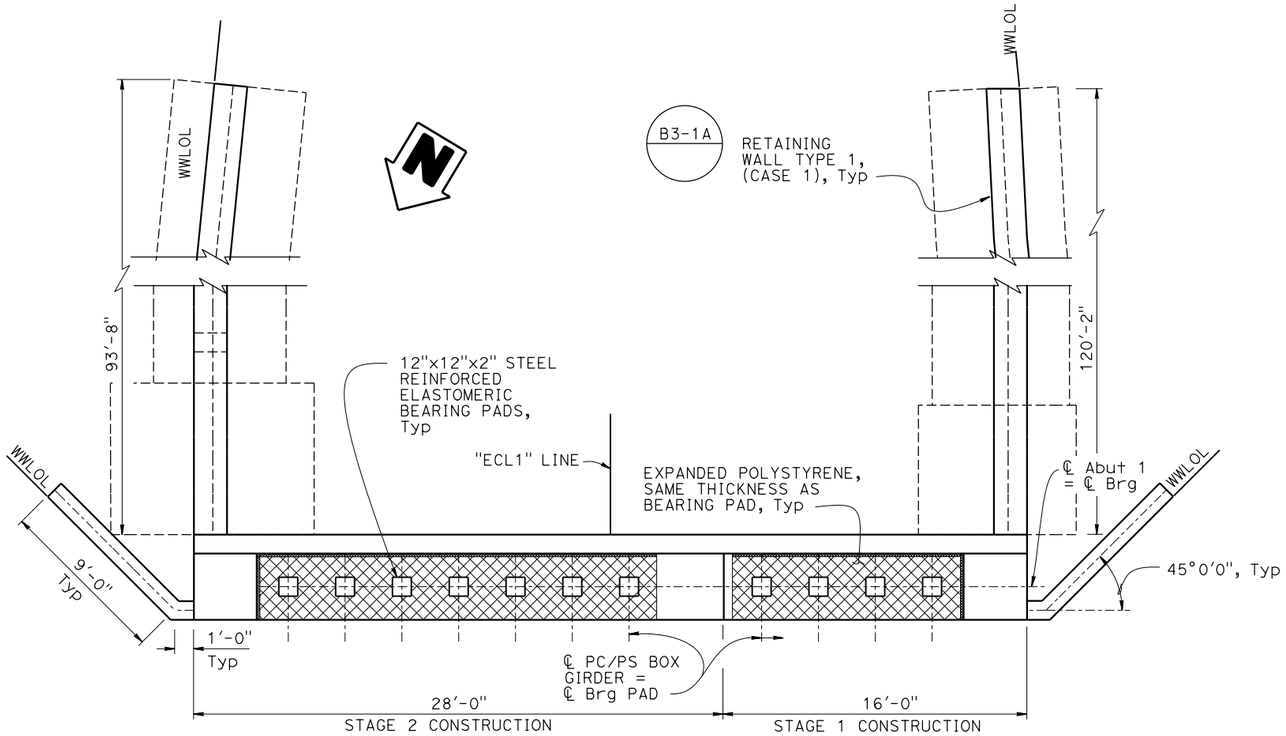

ABUTMENT PLAN
1/4" = 1'-0"

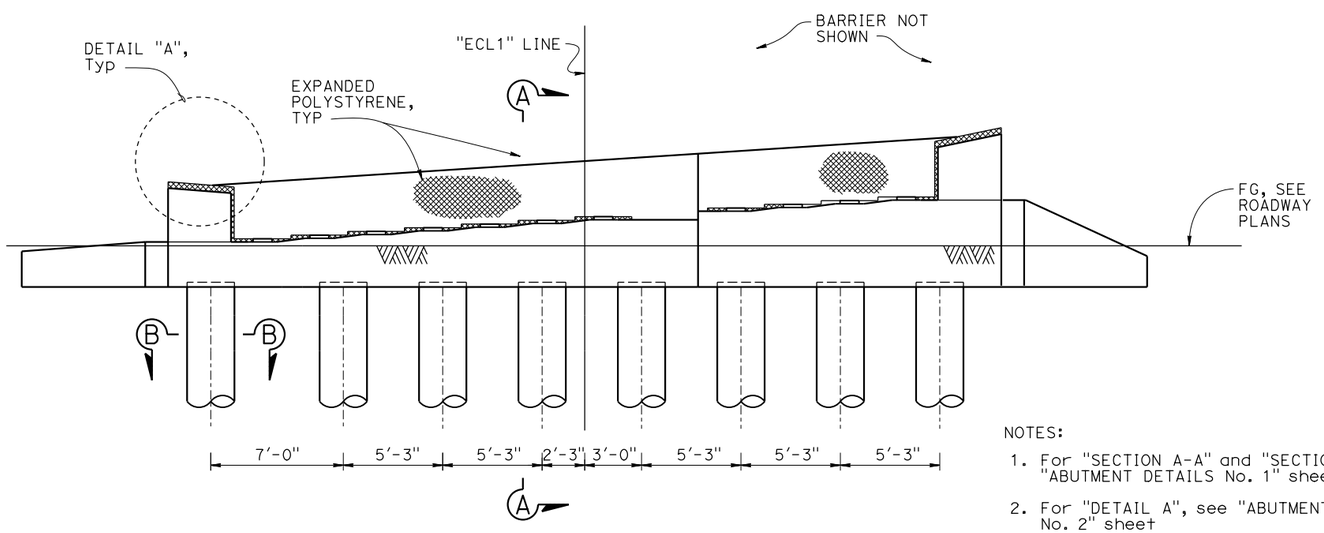

ABUTMENT ELEVATION
1/4" = 1'-0"

NOTES:

1. For "SECTION A-A" and "SECTION B-B", see "ABUTMENT DETAILS No. 1" sheet
2. For "DETAIL A", see "ABUTMENT DETAILS No. 2" sheet

	BY	CHECKED
DESIGN	Quang Nguyen	Alireza Yazdani Motlagh
DETAILS	Shadi Motalebi	Alireza Yazdani Motlagh
QUANTITIES	Joey Aquino	Jacqueline Koyama

STATE OF CALIFORNIA DEPARTMENT OF TRANSPORTATION

DIVISION OF ENGINEERING SERVICES BRIDGE DESIGN BRANCH 3

BRIDGE No. 36-0125
POST MILE 15.49

KINGS CREEK BRIDGE (REPLACE)
ABUTMENT 1 LAYOUT

STRUCTURES DESIGN DETAIL SHEET (ENGLISH) (REVISION 3/10/2021)

DATE PLOTTED => 3-DEC-2021 TIME PLOTTED => 16:03
FILE => 36-0125-f-a01_l01.dgn USERNAME => s136540
ORIGINAL SCALE IN INCHES FOR REDUCED PLANS 0 1 2 3

UNIT: 3578
PROJECT NUMBER & PHASE: 05160000781

COUNTY/ROUTE: Scr/9
CONTRACT No.: 05-1H4704

DISREGARD PRINTS BEARING EARLIER REVISION DATES

REVISION DATES: 5-12-21

SHEET X OF X

DocuSign Envelope ID: EF8475C0-0470-4E52-B5B5-25D92AE11799

INCOMPLETE PLAN FOR DESIGN STUDY
PRINTED DATE: 3-DEC-2021
Office of Structure Design
STATE OF CALIFORNIA

Dist	COUNTY	ROUTE	POST MILES TOTAL PROJECT	SHEET No.	TOTAL SHEETS

REGISTERED CIVIL ENGINEER X DATE
PLANS APPROVAL DATE

REGISTERED PROFESSIONAL ENGINEER
Joey M Aquino III
No. 58386
Exp. 12-31-22
CIVIL
STATE OF CALIFORNIA

THE STATE OF CALIFORNIA OR ITS OFFICERS OR AGENTS SHALL NOT BE RESPONSIBLE FOR THE ACCURACY OR COMPLETENESS OF SCANNED COPIES OF THIS PLAN SHEET.

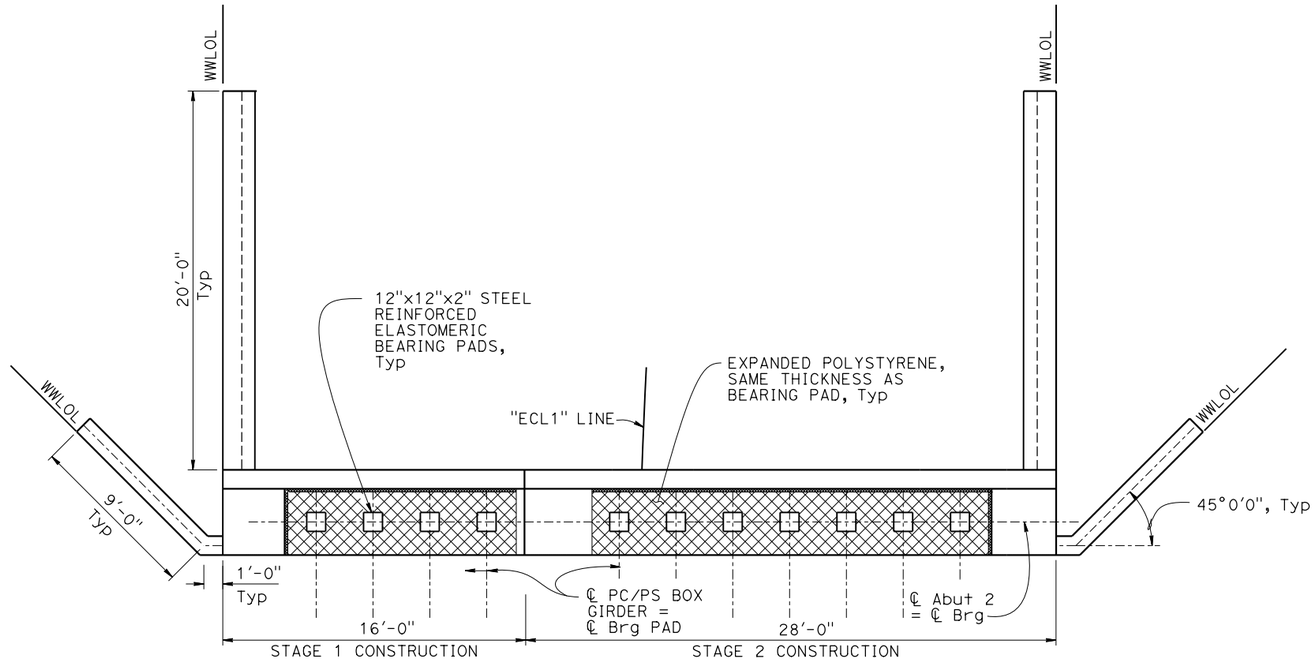

ABUTMENT PLAN
1/4" = 1'-0"

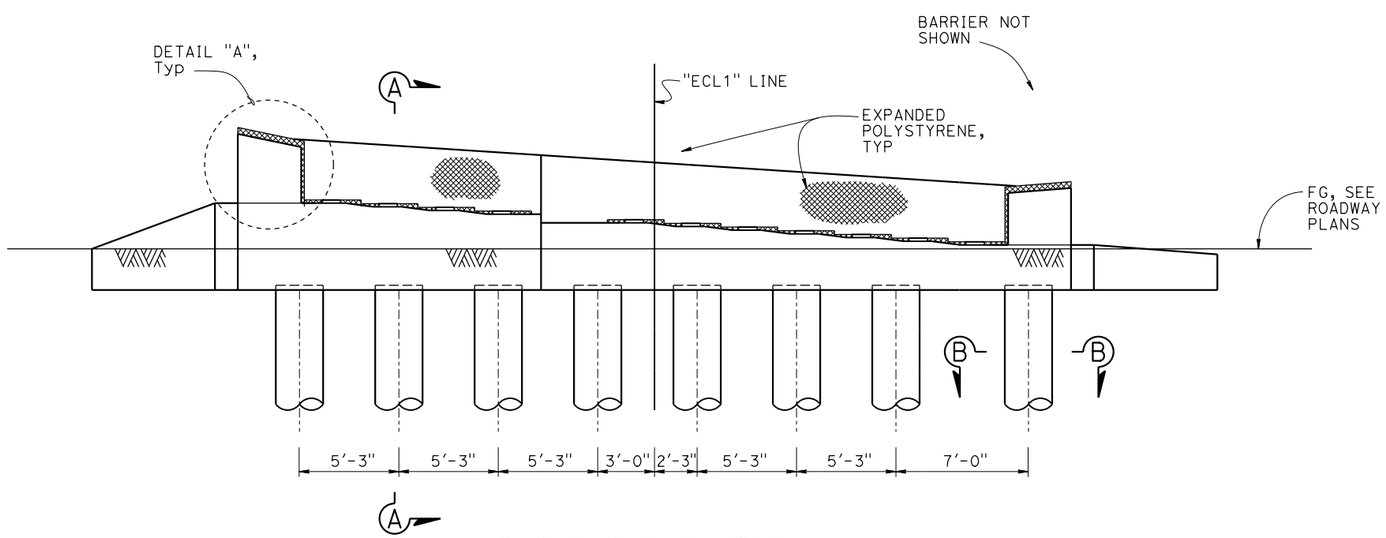

ABUTMENT ELEVATION
1/4" = 1'-0"

NOTES:

1. For "SECTION A-A" and "SECTION B-B", see "ABUTMENT DETAILS No. 1" sheet
2. For "DETAIL A" ,see "ABUTMENT DETAILS No. 2" sheet

	BY	CHECKED
DESIGN	Quang Nguyen	Alireza Yazdani Motlagh
DETAILS	Shadi Motalebi	Alireza Yazdani Motlagh
QUANTITIES	Joey Aquino	Jacqueline Koyama

STATE OF CALIFORNIA
DEPARTMENT OF TRANSPORTATION

DIVISION OF ENGINEERING SERVICES
BRIDGE DESIGN
BRANCH 3

BRIDGE No. 36-0125
POST MILE 15.49

KINGS CREEK BRIDGE (REPLACE)
ABUTMENT 2 LAYOUT

STRUCTURES DESIGN DETAIL SHEET (ENGLISH) (REVISION 3/10/2021)

DATE PLOTTED => 3-DEC-2021 TIME PLOTTED => 16:03
FILE => 36-0125-f-a02_lo1.dgn USERNAME => s136540
ORIGINAL SCALE IN INCHES FOR REDUCED PLANS 0 1 2 3

UNIT: 3578
PROJECT NUMBER & PHASE: 05160000781
COUNTY/ROUTE: Scr/9
CONTRACT No.: 05-1H4704

DISREGARD PRINTS BEARING EARLIER REVISION DATES

REVISION DATES				SHEET	OF
5-12-21				X	X

DocuSign Envelope ID: EF8475C0-0470-4E52-B5B5-25D92AE11799

INCOMPLETE PLAN FOR DESIGN STUDY
PRINTED DATE: 3-DEC-2021
Office of Structure Design
STATE OF CALIFORNIA

Dist	COUNTY	ROUTE	POST MILES TOTAL PROJECT	SHEET No.	TOTAL SHEETS

REGISTERED CIVIL ENGINEER X DATE
PLANS APPROVAL DATE

REGISTERED PROFESSIONAL ENGINEER Joey M Aquino III No. 58386 Exp. 12-31-22 CIVIL STATE OF CALIFORNIA

THE STATE OF CALIFORNIA OR ITS OFFICERS OR AGENTS SHALL NOT BE RESPONSIBLE FOR THE ACCURACY OR COMPLETENESS OF SCANNED COPIES OF THIS PLAN SHEET.

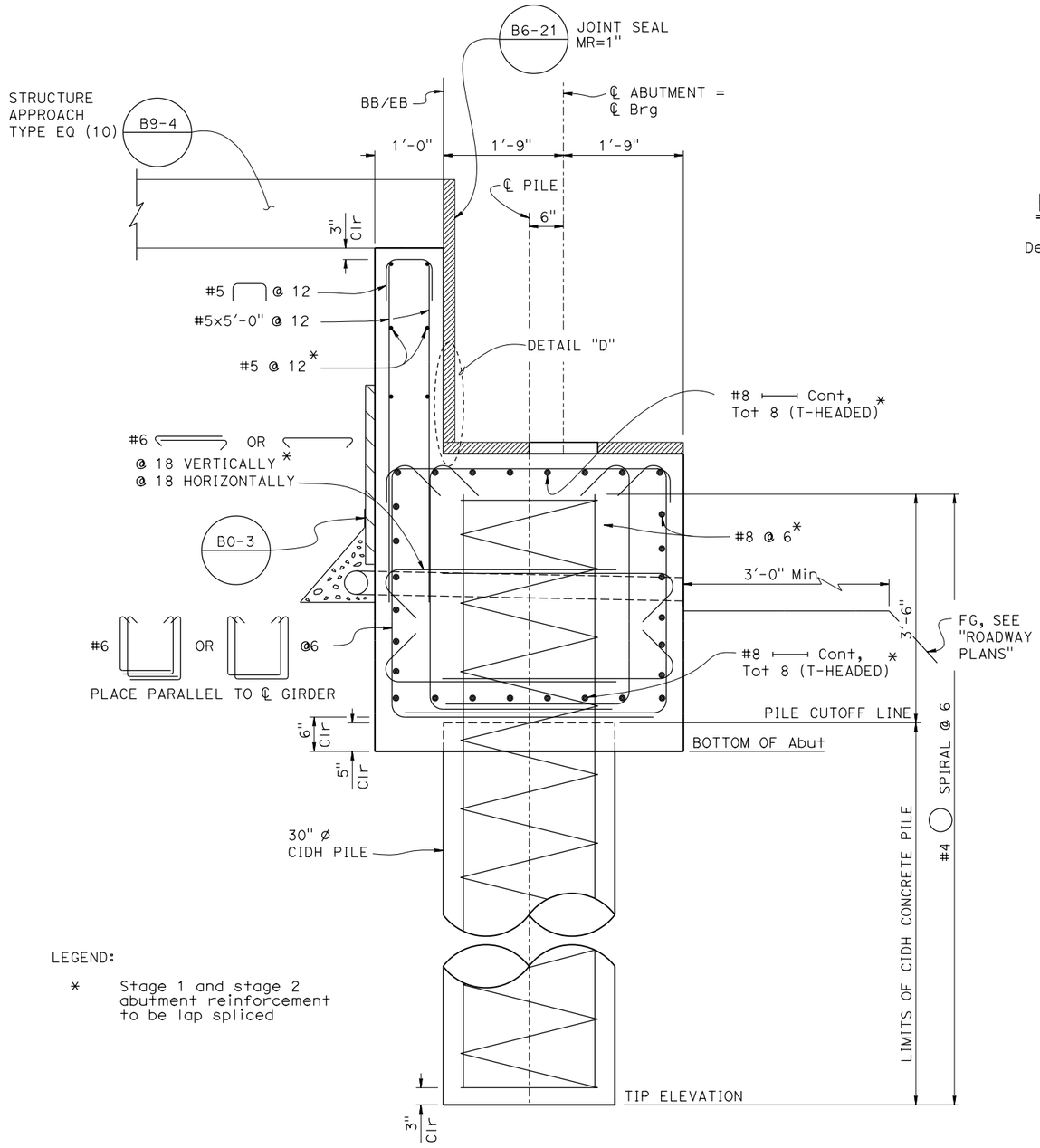

SECTION A-A
1" = 1'-0"

LEGEND:

* Stage 1 and stage 2 abutment reinforcement to be lap spliced

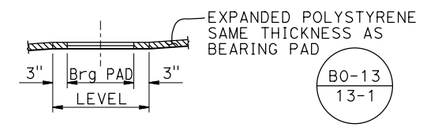

BEARING PAD DETAIL
NO SCALE
Details typical at all bearing pads

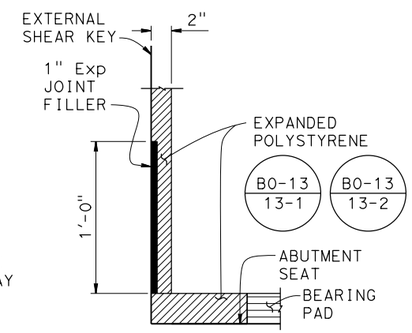

DETAIL E
NO SCALE

For location of "DETAIL E", see "DETAIL A" on "ABUTMENT DETAILS No. 2" sheet

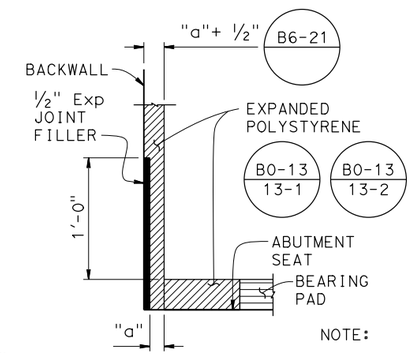

NOTE:

DETAIL D
NO SCALE

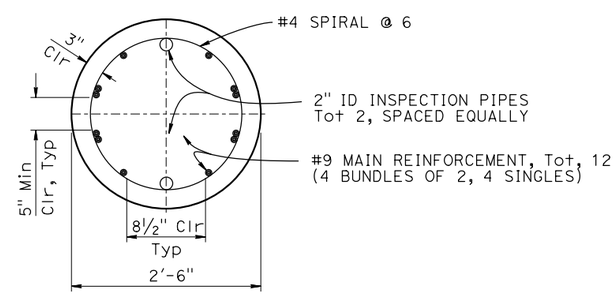

NOTES:

All piles reinforcements to be Epoxy coated

SECTION B-B
1" = 1'-0"

	BY	CHECKED
DESIGN	Quang Nguyen	Alireza Yazdani Motlagh
DETAILS	Shadi Motalebi	Alireza Yazdani Motlagh
QUANTITIES	Joey Aquino	Jacqueline Koyama

STATE OF CALIFORNIA
DEPARTMENT OF TRANSPORTATION

DIVISION OF ENGINEERING SERVICES
BRIDGE DESIGN
BRANCH 3

BRIDGE No. 36-0125
POST MILE 15.49

KINGS CREEK BRIDGE (REPLACE)
ABUTMENT DETAILS No. 1

STRUCTURES DESIGN DETAIL SHEET (ENGLISH) (REVISION 3/10/2021)

DATE PLOTTED => 3-DEC-2021 TIME PLOTTED => 16:03
FILE => 36-0125-f-ad+01.dgn USERNAME => s136540

ORIGINAL SCALE IN INCHES FOR REDUCED PLANS 0 1 2 3

UNIT: 3578
PROJECT NUMBER & PHASE: 05160000781

COUNTY/ROUTE: Scr/9
CONTRACT No.: 05-1H4704

DISREGARD PRINTS BEARING EARLIER REVISION DATES

REVISION DATES: 5-13-21

SHEET X OF X

DocuSign Envelope ID: EF8475C0-0470-4E52-B5B5-25D92AE11799

INCOMPLETE PLAN FOR DESIGN STUDY
PRINTED DATE: 3-DEC-2021
Office of Structure Design
STATE OF CALIFORNIA

Dist	COUNTY	ROUTE	POST MILES TOTAL PROJECT	SHEET No.	TOTAL SHEETS

REGISTERED CIVIL ENGINEER X DATE

PLANS APPROVAL DATE

REGISTERED PROFESSIONAL ENGINEER Joey M Aquino III No. 58386 Exp. 12-31-22 CIVIL STATE OF CALIFORNIA

THE STATE OF CALIFORNIA OR ITS OFFICERS OR AGENTS SHALL NOT BE RESPONSIBLE FOR THE ACCURACY OR COMPLETENESS OF SCANNED COPIES OF THIS PLAN SHEET.

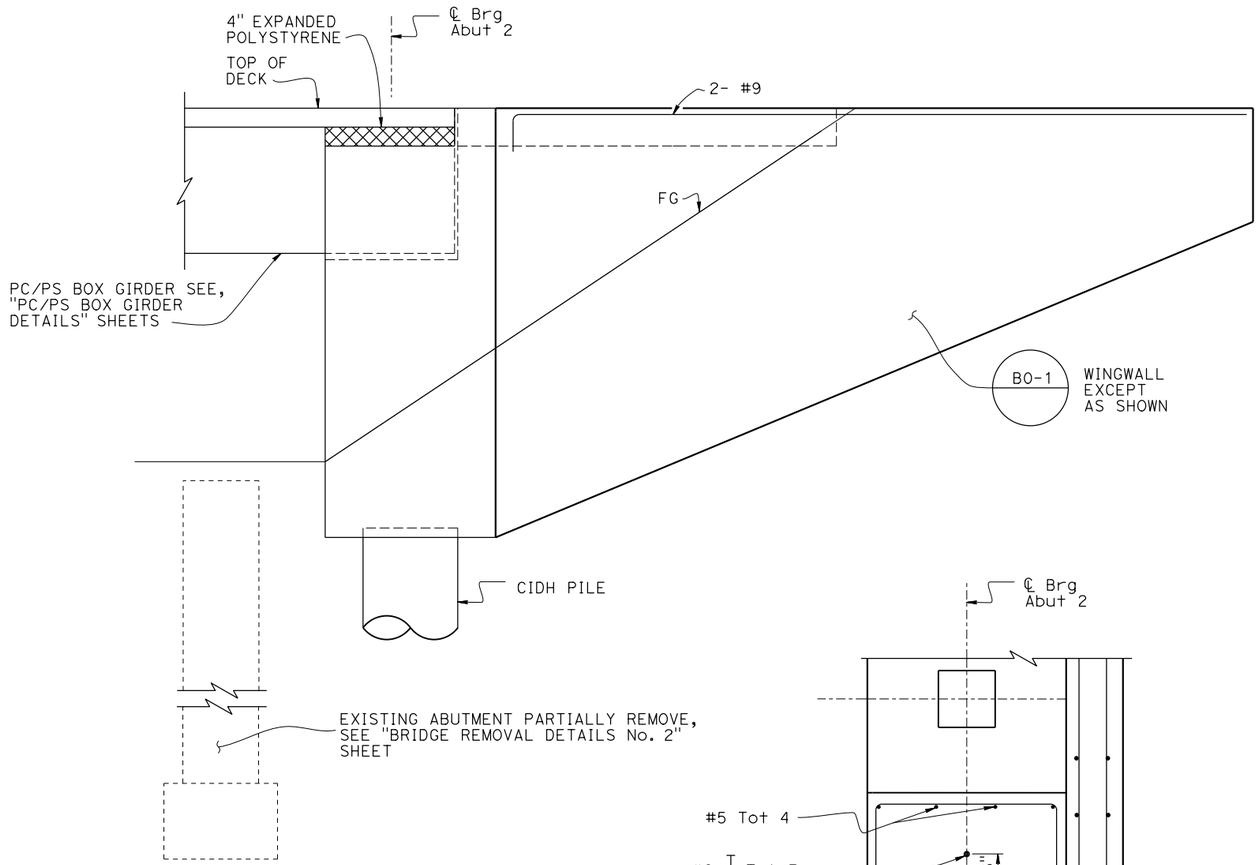

WINGWALL ELEVATION
1/2" = 1'-0"

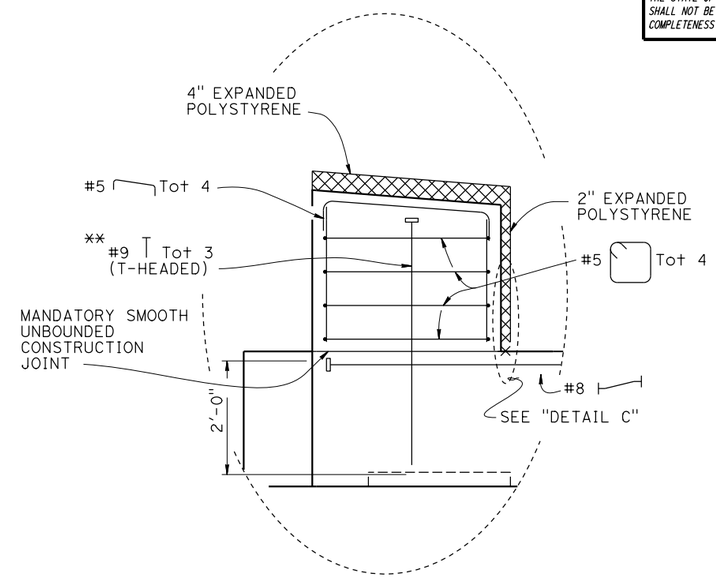

DETAIL A
3/4" = 1'-0"

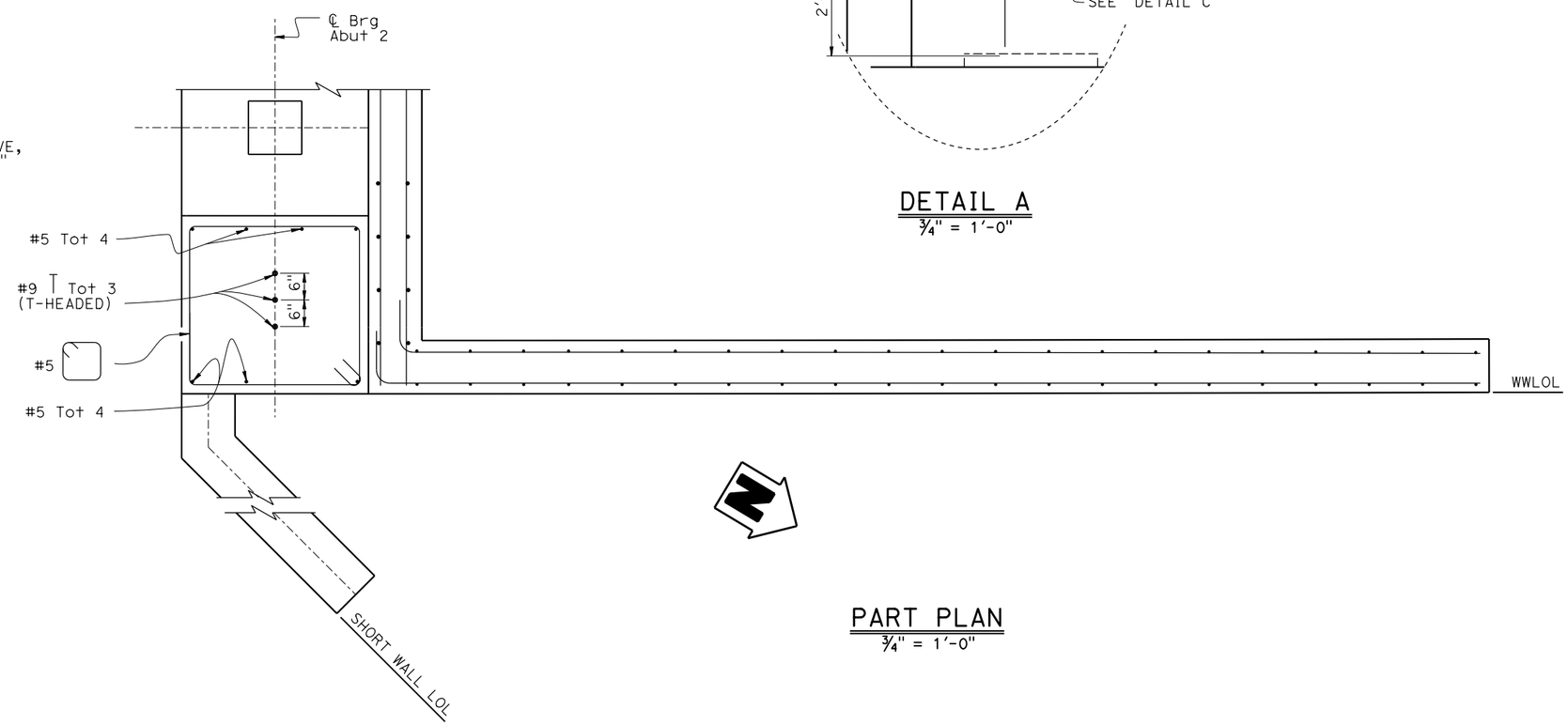

PART PLAN
3/4" = 1'-0"

DESIGN	BY Quang Nguyen	CHECKED Alireza Yazdani Motlagh	
DETAILS	BY Shadi Motalebi	CHECKED Alireza Yazdani Motlagh	
QUANTITIES	BY Joey Aquino	CHECKED Jacqueline Koyama	

STATE OF CALIFORNIA
DEPARTMENT OF TRANSPORTATION

DIVISION OF ENGINEERING SERVICES
BRIDGE DESIGN
BRANCH 3

BRIDGE No. 36-0125
POST MILE 15.49

KINGS CREEK BRIDGE (REPLACE)
ABUTMENT DETAILS No. 2

STRUCTURES DESIGN DETAIL SHEET (ENGLISH) (REVISION 3/10/2021)

DATE PLOTTED => 3-DEC-2021 TIME PLOTTED => 16:03
FILE => 36-0125-f-ad+02.dgn USERNAME => s136540

ORIGINAL SCALE IN INCHES FOR REDUCED PLANS 0 1 2 3

UNIT: 3578
PROJECT NUMBER & PHASE: 05160000781

COUNTY/ROUTE: Scr/9
CONTRACT No.: 05-1H4704

DISREGARD PRINTS BEARING EARLIER REVISION DATES

REVISION DATES: 8-2-21

SHEET X OF X

DocuSign Envelope ID: EF8475C0-0470-4E52-B5B5-25D92AE11799

INCOMPLETE PLAN FOR DESIGN STUDY
PRINTED DATE: 3-DEC-2021
Office of Structure Design
STATE OF CALIFORNIA

Dist	COUNTY	ROUTE	POST MILES TOTAL PROJECT	SHEET No.	TOTAL SHEETS

REGISTERED CIVIL ENGINEER X DATE

PLANS APPROVAL DATE

REGISTERED PROFESSIONAL ENGINEER
Joey M Aquino III
No. 58386
Exp. 12-31-22
CIVIL
STATE OF CALIFORNIA

THE STATE OF CALIFORNIA OR ITS OFFICERS OR AGENTS SHALL NOT BE RESPONSIBLE FOR THE ACCURACY OR COMPLETENESS OF SCANNED COPIES OF THIS PLAN SHEET.

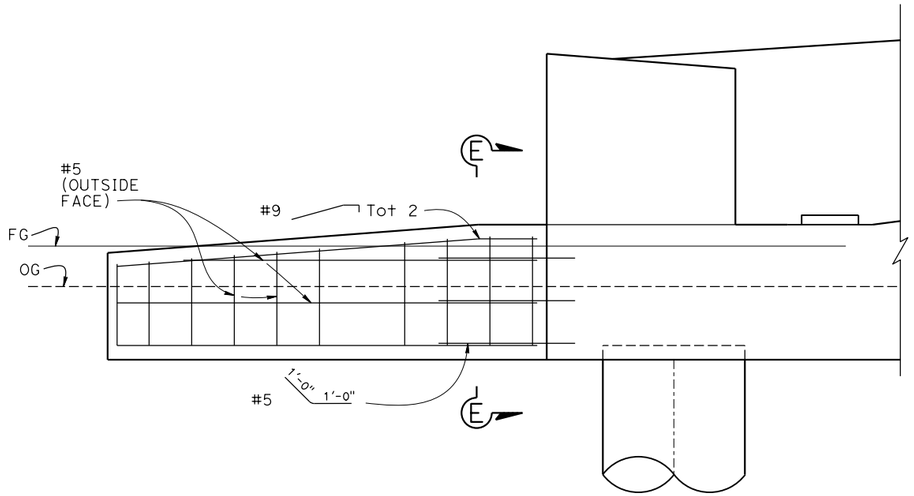

SHORT WALL ELEVATION
3/4" = 1'-0"

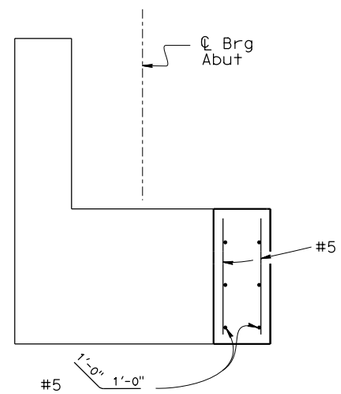

SECTION E-E
3/4" = 1'-0"

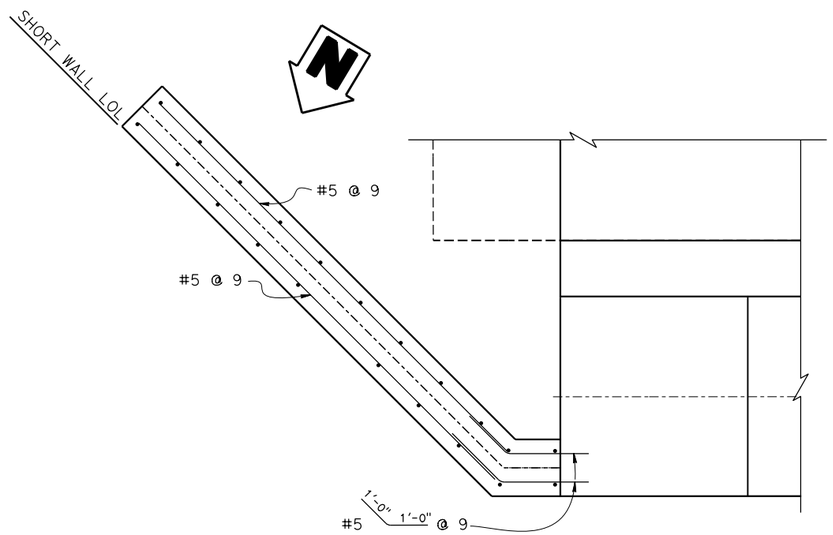

SHORT WALL PLAN
3/4" = 1'-0"

DESIGN	BY Quang Nguyen	CHECKED Alireza Yazdani Motlagh	
DETAILS	BY Shadi Motalebi	CHECKED Alireza Yazdani Motlagh	
QUANTITIES	BY Joey Aquino	CHECKED Jacqueline Koyama	

STATE OF CALIFORNIA
DEPARTMENT OF TRANSPORTATION

DIVISION OF ENGINEERING SERVICES
BRIDGE DESIGN
BRANCH 3

BRIDGE No. 36-0125
POST MILE 15.49

KINGS CREEK BRIDGE (REPLACE)
ABUTMENT DETAILS No. 3

STRUCTURES DESIGN DETAIL SHEET
(ENGLISH) (REVISION 3/10/2021)

DATE PLOTTED => 3-DEC-2021 TIME PLOTTED => 16:04
FILE => 36-0125-f-adt03.dgn USERNAME => s136540
ORIGINAL SCALE IN INCHES FOR REDUCED PLANS 0 1 2 3

UNIT: 3578
PROJECT NUMBER & PHASE: 05160000781
COUNTY/ROUTE: Scr/9
CONTRACT No.: 05-1H4704

DISREGARD PRINTS BEARING EARLIER REVISION DATES

REVISION DATES: 8-18-21

SHEET X OF X

DocuSign Envelope ID: EF8475C0-0470-4E52-B5B5-25D92AE11799

Dist	COUNTY	ROUTE	POST MILES TOTAL PROJECT	SHEET No.	TOTAL SHEETS

INCOMPLETE PLAN FOR DESIGN STUDY
PRINTED DATE: 3-DEC-2021
Office of Structure Design
STATE OF CALIFORNIA

REGISTERED CIVIL ENGINEER X DATE

PLANS APPROVAL DATE

REGISTERED PROFESSIONAL ENGINEER Joey M Aquino III No. 58386 Exp. 12-31-22 CIVIL STATE OF CALIFORNIA

THE STATE OF CALIFORNIA OR ITS OFFICERS OR AGENTS SHALL NOT BE RESPONSIBLE FOR THE ACCURACY OR COMPLETENESS OF SCANNED COPIES OF THIS PLAN SHEET.

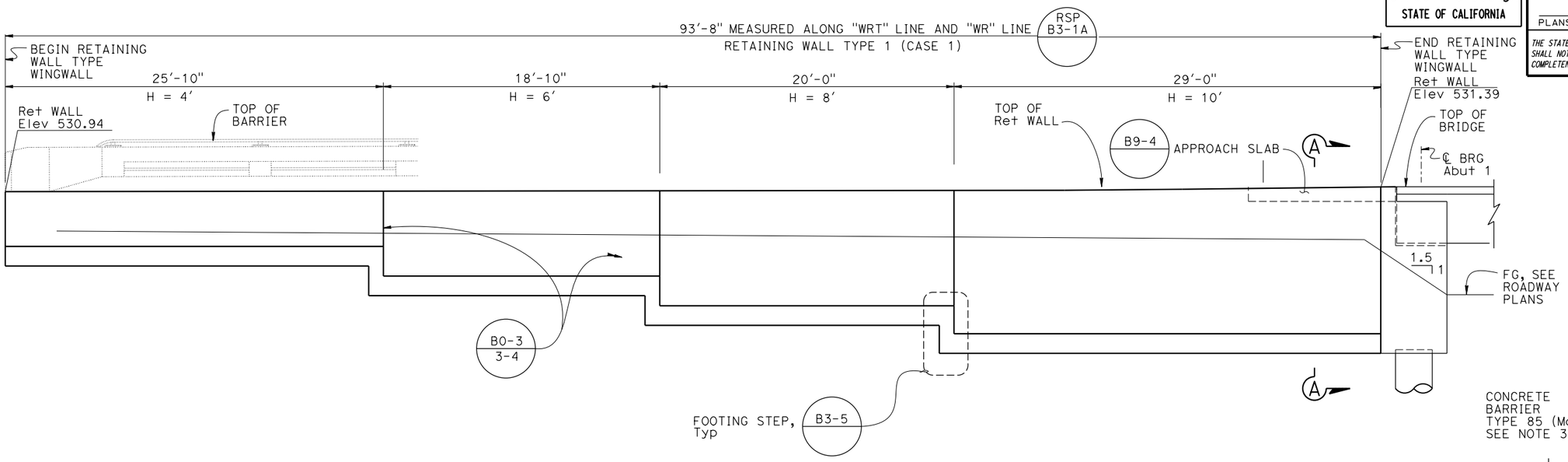

ELEVATION
1/4" = 1'-0"

NOTES:

1. Retaining wall expansion joints, weakened planes and weep holes shall be placed per Standard Plan B0-3.
2. Waterstops at expansion joints shall be extended into concrete curb. For details and drainage notes not shown, see Standard Plan B3-5.
3. For barrier details, see "CONCRETE BARRIER TYPE 85 DETAILS No. 1 ,2 and 3" sheets
4. For bottom of footing elevation, see "FOUNDATION PLAN" sheet

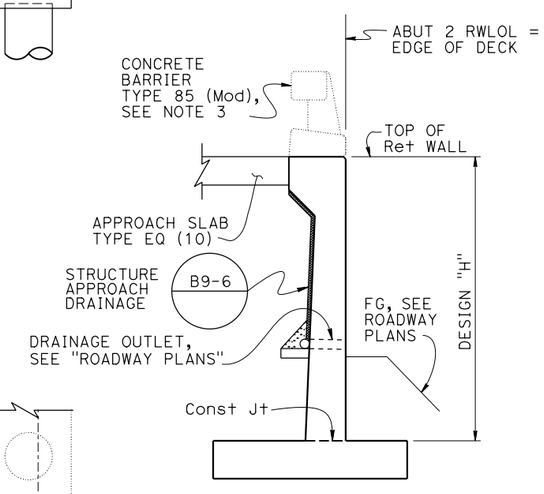

SECTION A-A
3/8" = 1'-0"

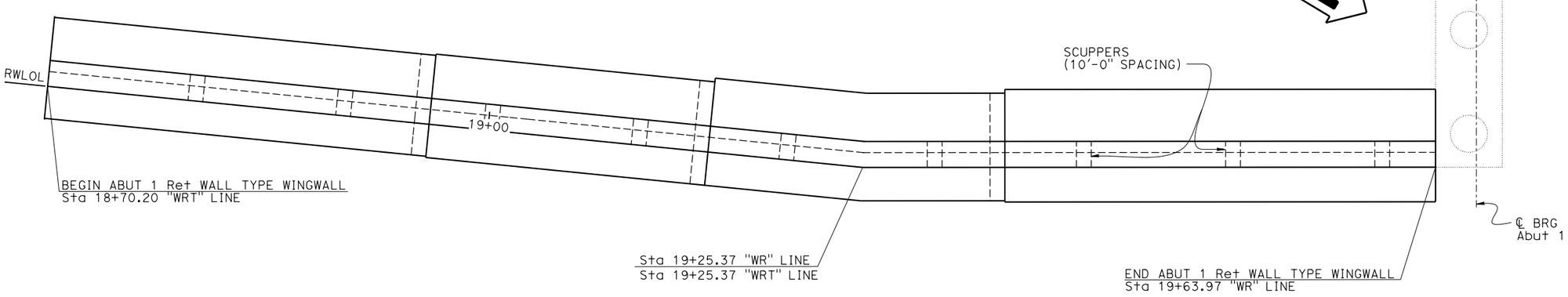

PLAN
1/4" = 1'-0"

	BY	CHECKED
DESIGN	Quang Nguyen	Alireza Yazdani Motlagh
DETAILS	Shadi Motalebi	Alireza Yazdani Motlagh
QUANTITIES	Joey Aquino	Jacqueline Koyama

STATE OF CALIFORNIA
DEPARTMENT OF TRANSPORTATION

DIVISION OF ENGINEERING SERVICES
BRIDGE DESIGN
BRANCH 3

BRIDGE No. 36-0125
POST MILE 15.49

KINGS CREEK BRIDGE (REPLACE)
ABUTMENT 1 RETAINING WALL TYPE WINGWALL LAYOUT NO. 1

STRUCTURES DESIGN DETAIL SHEET (ENGLISH) (REVISION 3/10/2021)

DATE PLOTTED => 3-DEC-2021 TIME PLOTTED => 16:04
FILE => 36-0125-g-rwdt01.dgn USERNAME => s136540
ORIGINAL SCALE IN INCHES FOR REDUCED PLANS 0 1 2 3

UNIT: 3578
PROJECT NUMBER & PHASE: 05160000781

COUNTY/ROUTE: Scr/9
CONTRACT No.: 05-1H4704

DISREGARD PRINTS BEARING EARLIER REVISION DATES

REVISION DATES: 8-2-21

SHEET X OF X

DocuSign Envelope ID: EF8475C0-0470-4E52-B5B5-25D92AE11799

INCOMPLETE PLAN FOR DESIGN STUDY
PRINTED DATE: 3-DEC-2021
Office of Structure Design
STATE OF CALIFORNIA

Dist	COUNTY	ROUTE	POST MILES TOTAL PROJECT	SHEET No.	TOTAL SHEETS

REGISTERED CIVIL ENGINEER X DATE

PLANS APPROVAL DATE

REGISTERED PROFESSIONAL ENGINEER Joey M Aquino III No. 58386 Exp. 12-31-22 CIVIL STATE OF CALIFORNIA

THE STATE OF CALIFORNIA OR ITS OFFICERS OR AGENTS SHALL NOT BE RESPONSIBLE FOR THE ACCURACY OR COMPLETENESS OF SCANNED COPIES OF THIS PLAN SHEET.

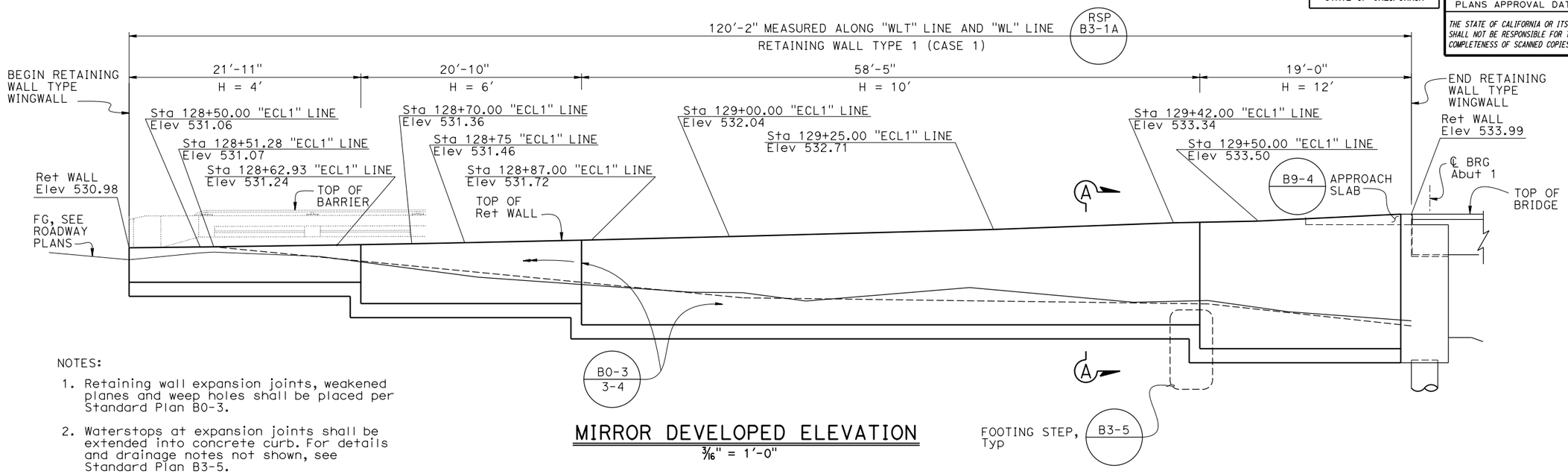

NOTES:

1. Retaining wall expansion joints, weakened planes and weep holes shall be placed per Standard Plan B0-3.
2. Waterstops at expansion joints shall be extended into concrete curb. For details and drainage notes not shown, see Standard Plan B3-5.
3. For barrier details, see "CONCRETE BARRIER TYPE 85 DETAILS No. 1 ,2 and 3" sheets
4. For bottom of footing elevation, see "FOUNDATION PLAN" sheet

MIRROR DEVELOPED ELEVATION

3/16" = 1'-0"

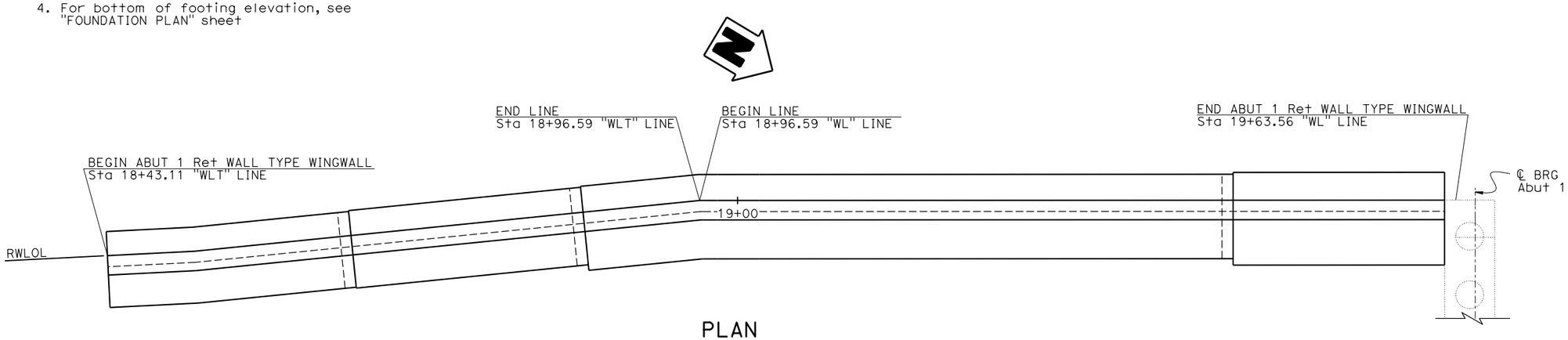

PLAN

3/16" = 1'-0"

DESIGN	BY Quang Nguyen	CHECKED Alireza Yazdani Motlagh	
DETAILS	BY Shadi Motalebi	CHECKED Alireza Yazdani Motlagh	
QUANTITIES	BY Joey Aquino	CHECKED Jacqueline Koyama	

STATE OF CALIFORNIA DEPARTMENT OF TRANSPORTATION

DIVISION OF ENGINEERING SERVICES BRIDGE DESIGN BRANCH 3

BRIDGE No. 36-0125
POST MILE 15.49

KINGS CREEK BRIDGE (REPLACE)

ABUTMENT 1 RETAINING WALL TYPE WINGWALL LAYOUT NO. 2

STRUCTURES DESIGN DETAIL SHEET (ENGLISH) (REVISION 3/10/2021)

DATE PLOTTED => 3-DEC-2021 TIME PLOTTED => 16:04
FILE => 36-0125-g-rwdt02.dgn USERNAME => s136540

ORIGINAL SCALE IN INCHES FOR REDUCED PLANS 0 1 2 3

UNIT: 3578
PROJECT NUMBER & PHASE: 05160000781

COUNTY/ROUTE: Scr/9
CONTRACT No.: 05-1H4704

DISREGARD PRINTS BEARING EARLIER REVISION DATES

REVISION DATES 8-18-21

SHEET X OF X

DocuSign Envelope ID: EF8475C0-0470-4E52-B5B5-25D92AE11799

Dist	COUNTY	ROUTE	POST MILES TOTAL PROJECT	SHEET No.	TOTAL SHEETS

INCOMPLETE PLAN FOR DESIGN STUDY
PRINTED DATE: 3-DEC-2021
Office of Structure Design
STATE OF CALIFORNIA

REGISTERED CIVIL ENGINEER X DATE

PLANS APPROVAL DATE

REGISTERED PROFESSIONAL ENGINEER Joey M Aquino III No. 58386 Exp. 12-31-22 CIVIL STATE OF CALIFORNIA

THE STATE OF CALIFORNIA OR ITS OFFICERS OR AGENTS SHALL NOT BE RESPONSIBLE FOR THE ACCURACY OR COMPLETENESS OF SCANNED COPIES OF THIS PLAN SHEET.

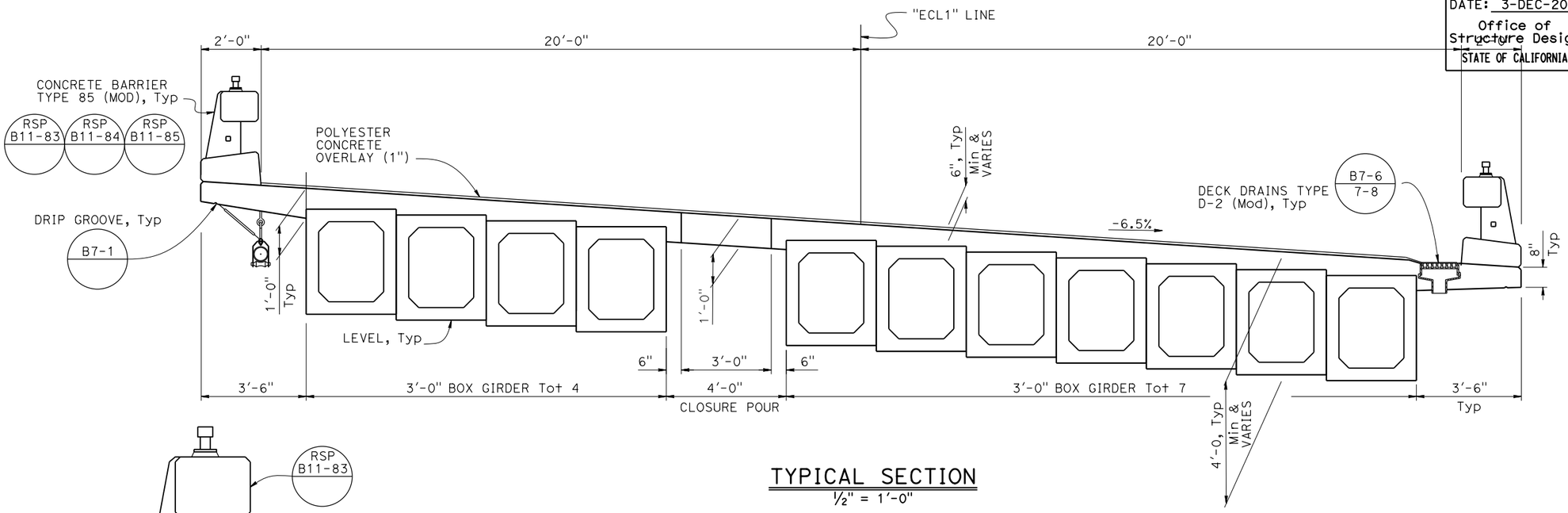

TYPICAL SECTION
½" = 1'-0"

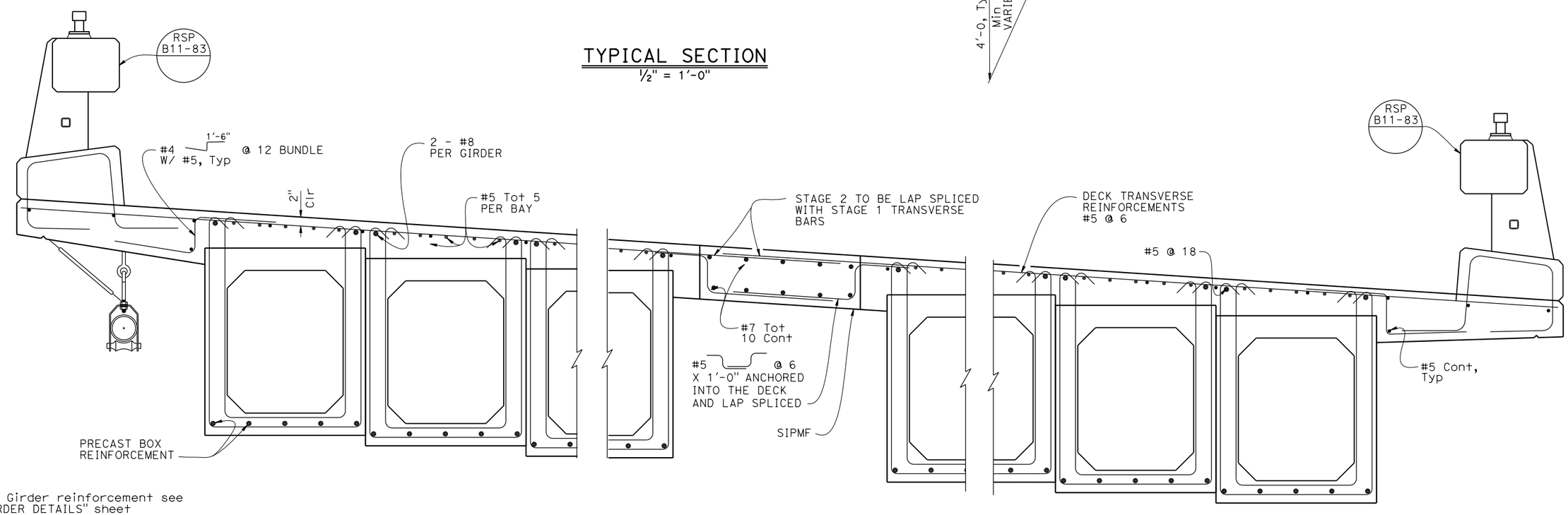

NOTES:

1. For Box Girder reinforcement see "BOX GIRDER DETAILS" sheet
2. PC/PS Box Girder reinforcement not shown
3. Inserts for the pipe hanger will be installed during stage 1

PART TYPICAL SECTION
1" = 1'-0"

	BY	CHECKED
DESIGN	Quang Nguyen	Alireza Yazdani Motlagh
DETAILS	Shadi Motalebi	Alireza Yazdani Motlagh
QUANTITIES	Joey Aquino	Jacqueline Koyama

STATE OF CALIFORNIA DEPARTMENT OF TRANSPORTATION

DIVISION OF ENGINEERING SERVICES BRIDGE DESIGN BRANCH 3

BRIDGE No. 36-0125
POST MILE 15.49

KINGS CREEK BRIDGE (REPLACE)
TYPICAL SECTION

STRUCTURES DESIGN DETAIL SHEET (ENGLISH) (REVISION 3/10/2021)

DATE PLOTTED => 3-DEC-2021 TIME PLOTTED => 16:04
FILE => 36-0125-k-ts.dgn USERNAME => s136540

ORIGINAL SCALE IN INCHES FOR REDUCED PLANS 0 1 2 3

UNIT: 3578
PROJECT NUMBER & PHASE: 05160000781

COUNTY/ROUTE: Scr/9
CONTRACT No.: 05-1H4704

DISREGARD PRINTS BEARING EARLIER REVISION DATES

REVISION DATES: 5-20-21

SHEET X OF X

DocuSign Envelope ID: EF8475C0-0470-4E52-B5B5-25D92AE11799

INCOMPLETE PLAN FOR DESIGN STUDY
PRINTED DATE: 3-DEC-2021
Office of Structure Design
STATE OF CALIFORNIA

Dist	COUNTY	ROUTE	POST MILES TOTAL PROJECT	SHEET No.	TOTAL SHEETS

REGISTERED CIVIL ENGINEER X DATE
PLANS APPROVAL DATE

REGISTERED PROFESSIONAL ENGINEER Joey M Aquino III No. 58386 Exp. 12-31-22 CIVIL STATE OF CALIFORNIA

THE STATE OF CALIFORNIA OR ITS OFFICERS OR AGENTS SHALL NOT BE RESPONSIBLE FOR THE ACCURACY OR COMPLETENESS OF SCANNED COPIES OF THIS PLAN SHEET.

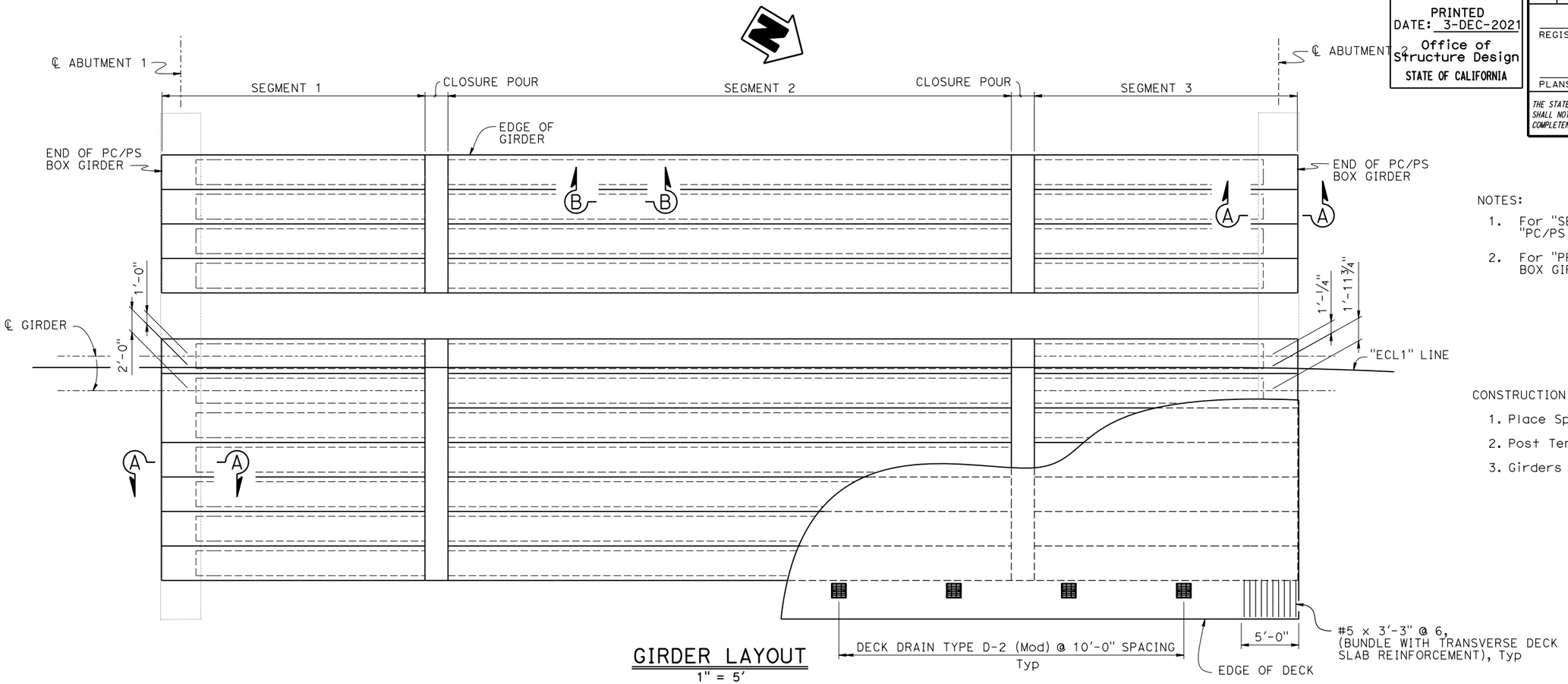

GIRDER LAYOUT
1" = 5'

NOTES:

1. For "SECTION A-A" and "SECTION B-B" see "PC/PS BOX GIRDER DETAILS No. 3" sheet
2. For "PRE-TENSIONING NOTES" see, "PC/PS BOX GIRDER DETAILS No. 1" sheet

CONSTRUCTION SEQUENCE FOR SPLICE GIRDER:

1. Place Splice diaphragms
2. Post Tensioning Girders
3. Girders lifted in place

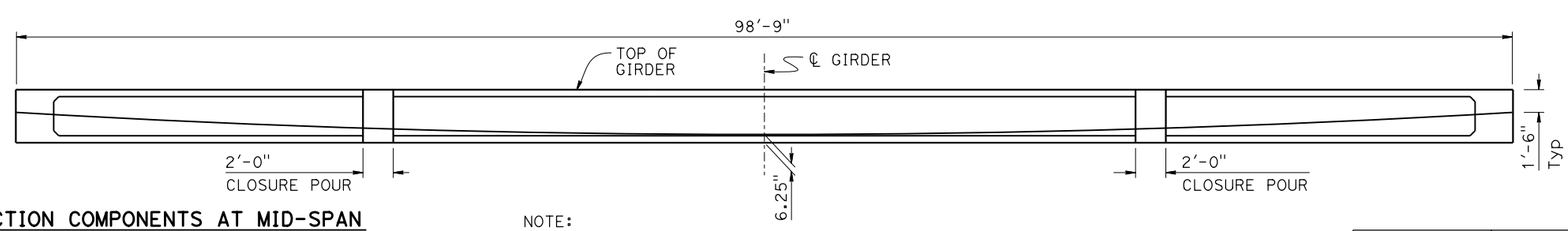

ELEVATION
1" = 5'

NOTE:
Cable path is parabolic between points shown

DEFLECTION COMPONENTS AT MID-SPAN

	Deck DL (in)	Rail DL (in)
Girder	2.0	0.3

POST-TENSIONING NOTES
270 ksi Low Relaxation Strands

Total Number of Girders	Pjack (Kips)	A_s Min (in^2)	Splice Concrete Strength (ksi)		Precast Girder Concrete Strength (ksi)		Anchor Set (in)
			f'_{ci}	f'_c	f'_{ci}	f'_c	
11	791	4.34	5.0	6.0	8.0	8.0	0.25

Deflection components: Informational - to be used in setting screed line elevations.
Screed line elevations for deck concrete will be determined by the Engineer.

	BY	CHECKED
DESIGN	Quang Nguyen	Alireza Yazdani Motlagh
DETAILS	Shadi Motalebi	Alireza Yazdani Motlagh
QUANTITIES	Joey Aquino	Jacqueline Koyama

STATE OF CALIFORNIA
DEPARTMENT OF TRANSPORTATION

DIVISION OF ENGINEERING SERVICES
BRIDGE DESIGN
BRANCH 3

BRIDGE No. 36-0125
POST MILE 15.49

KINGS CREEK BRIDGE (REPLACE)
PC/PS BOX GIRDER LAYOUT

STRUCTURES DESIGN DETAIL SHEET
(ENGLISH) (REVISION 3/10/2021)

DATE PLOTTED => 3-DEC-2021 TIME PLOTTED => 16:04
FILE => 36-0125-1-g_lo.dgn USERNAME => s136540
ORIGINAL SCALE IN INCHES FOR REDUCED PLANS 0 1 2 3

UNIT: 3578
PROJECT NUMBER & PHASE: 05160000781
COUNTY/ROUTE: Scr/9
CONTRACT No.: 05-1H4704

DISREGARD PRINTS BEARING EARLIER REVISION DATES

REVISION DATES: 6-29-21
SHEET X OF X

DocuSign Envelope ID: EF8475C0-0470-4E52-B5B5-25D92AE11799

INCOMPLETE PLAN FOR DESIGN STUDY
PRINTED DATE: 3-DEC-2021
Office of Structure Design
STATE OF CALIFORNIA

Dist	COUNTY	ROUTE	POST MILES TOTAL PROJECT	SHEET No.	TOTAL SHEETS

REGISTERED CIVIL ENGINEER X DATE
PLANS APPROVAL DATE

REGISTERED PROFESSIONAL ENGINEER
Joey M Aquino III
No. 58386
Exp. 12-31-22
CIVIL
STATE OF CALIFORNIA

THE STATE OF CALIFORNIA OR ITS OFFICERS OR AGENTS SHALL NOT BE RESPONSIBLE FOR THE ACCURACY OR COMPLETENESS OF SCANNED COPIES OF THIS PLAN SHEET.

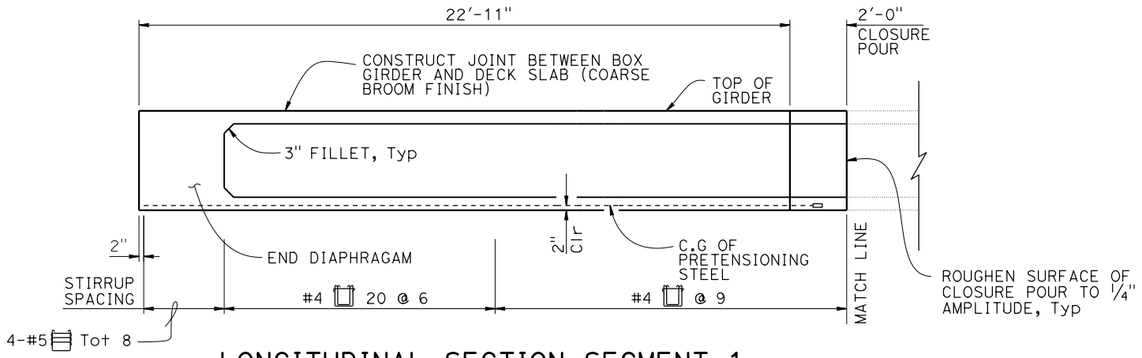

LONGITUDINAL SECTION SEGMENT 1

3/8" = 1'-0"

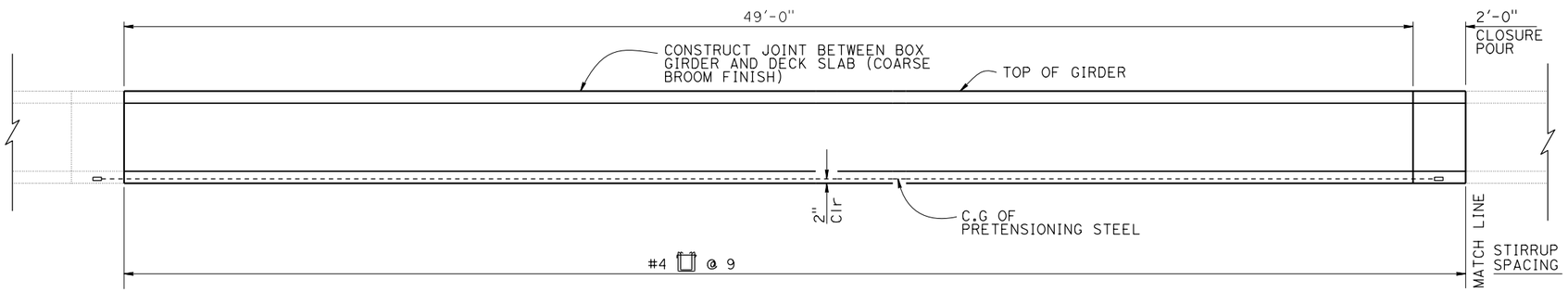

LONGITUDINAL SECTION SEGMENT 2

3/8" = 1'-0"

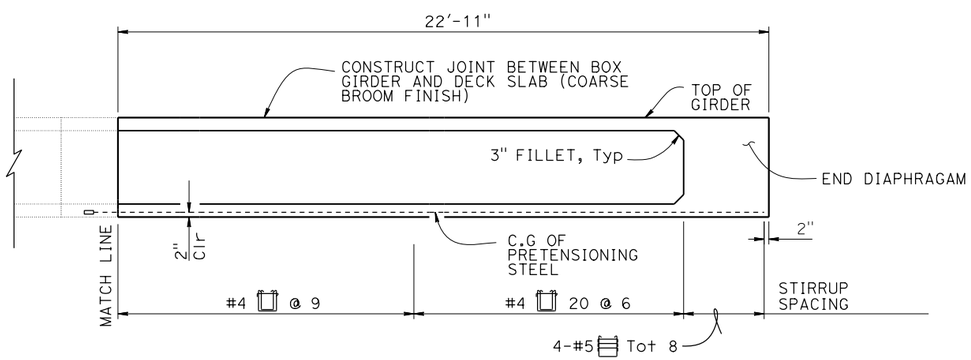

LONGITUDINAL SECTION SEGMENT 3

3/8" = 1'-0"

PRE-TENSIONING NOTES

270 ksi Low Relaxation Strands

Girder Segment	Total Number of Segment	Pjack (Kips)	A_s Min (in^2)	Concrete Strength (ksi) f'_{ci}
1 , 2 , 3	33	88	0.43	8.0

Pjack = Prestressing Force per Girder Segment.
As min = Minimum area of prestressing steel.
f'ci is at time of stressing.

NOTE:

For POST TENSIONING NOTES see, "PC/PS BOX GIRDER LAYOUT" sheet

PRESTRESSING NOTES:

1. JACKING FORCE (P): The jacking force required at the point of control along the span. The jacking force does not include any fabrication specific losses.
2. The maximum tensile stress in the prestressing steel upon release shall not exceed 75% of the specified minimum ultimate tensile strength of the prestressing steel.
3. The maximum temporary tensile stress (jacking stress) in the prestressing steel shall not exceed 80% of the specified minimum ultimate tensile strength of the prestressing steel.
4. CONCRETE STRENGTH: f'ci is at time of initial stressing
   f'c is at 28 days
5. Deflection components are Informational - to be used in setting screed line elevations
6. Screed line elevations for deck concrete will be determined by the Engineer.
7. Prestressing strand shall be 270 ksi low relaxation
8. A_s, Min is the minimum area required of prestressing steel

	BY	CHECKED
DESIGN	Quang Nguyen	Alireza Yazdani Motlagh
DETAILS	Shadi Motalebi	Alireza Yazdani Motlagh
QUANTITIES	Joey Aquino	Jacqueline Koyama

STATE OF CALIFORNIA
DEPARTMENT OF TRANSPORTATION

DIVISION OF ENGINEERING SERVICES
BRIDGE DESIGN
BRANCH 3

BRIDGE No. 36-0125
POST MILE 15.49

KINGS CREEK BRIDGE (REPLACE)
PC/PS BOX GIRDER DETAILS No. 1

STRUCTURES DESIGN DETAIL SHEET (ENGLISH) (REVISION 3/10/2021)

DATE PLOTTED => 3-DEC-2021 TIME PLOTTED => 16:04
FILE => 36-0125-1-gdt01.dgn USERNAME => s136540
ORIGINAL SCALE IN INCHES FOR REDUCED PLANS 0 1 2 3

UNIT: 3578
PROJECT NUMBER & PHASE: 05160000781
COUNTY/ROUTE: Scr/9
CONTRACT No.: 05-1H4704

DISREGARD PRINTS BEARING EARLIER REVISION DATES

REVISION DATES 66289221

SHEET X OF X

DocuSign Envelope ID: EF8475C0-0470-4E52-B5B5-25D92AE11799

INCOMPLETE PLAN FOR DESIGN STUDY
PRINTED DATE: 3-DEC-2021
Office of Structure Design
STATE OF CALIFORNIA

Dist	COUNTY	ROUTE	POST MILES TOTAL PROJECT	SHEET No.	TOTAL SHEETS

REGISTERED CIVIL ENGINEER X DATE

PLANS APPROVAL DATE

REGISTERED PROFESSIONAL ENGINEER
Joey M Aquino III
No. 58386
Exp. 12-31-22
CIVIL
STATE OF CALIFORNIA

THE STATE OF CALIFORNIA OR ITS OFFICERS OR AGENTS SHALL NOT BE RESPONSIBLE FOR THE ACCURACY OR COMPLETENESS OF SCANNED COPIES OF THIS PLAN SHEET.

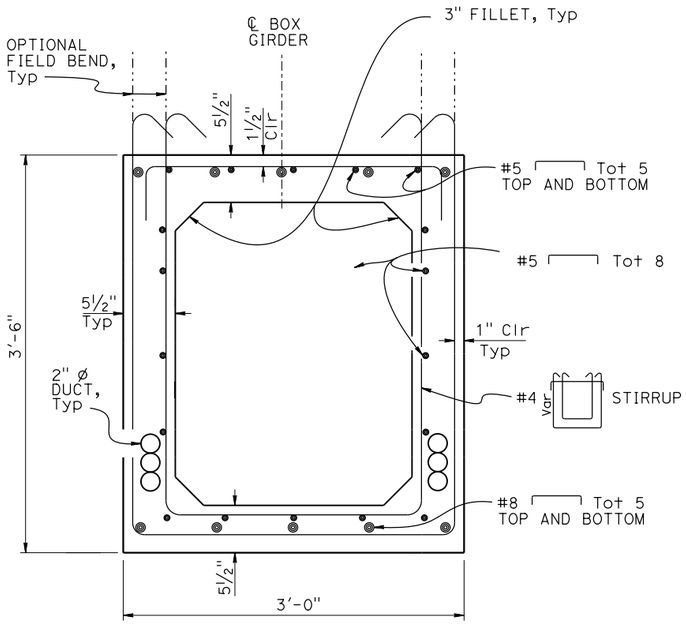

INTERIOR/EXTERIOR PC/PS BOX GIRDER

1½" = 1'-0"

NOTES:

1. Adjust steel spacing to avoid conflict with P/S strands
2. Adjust tail length of stirrups to match deck cross slope and post tensioning ducts
3. Not all Pre-stressed ducts are shown

	BY	CHECKED
DESIGN	Quang Nguyen	Alireza Yazdani Motlagh
DETAILS	Shadi Motalebi	Alireza Yazdani Motlagh
QUANTITIES	Joey Aquino	Jacqueline Koyama

STATE OF CALIFORNIA
DEPARTMENT OF TRANSPORTATION

DIVISION OF ENGINEERING SERVICES
BRIDGE DESIGN
BRANCH 3

BRIDGE No. 36-0125
POST MILE 15.49

KINGS CREEK BRIDGE (REPLACE)
PC/PS BOX GIRDER DETAILS No. 2

STRUCTURES DESIGN DETAIL SHEET (ENGLISH) (REVISION 3/10/2021)

DATE PLOTTED => 3-DEC-2021 TIME PLOTTED => 16:04
FILE => 36-0125-1-gdt02.dgn USERNAME => s136540
ORIGINAL SCALE IN INCHES FOR REDUCED PLANS 0 1 2 3

UNIT: 3578
PROJECT NUMBER & PHASE: 05160000781

COUNTY/ROUTE: Scr/9
CONTRACT No.: 05-1H4704

DISREGARD PRINTS BEARING EARLIER REVISION DATES

REVISION DATES: 6-29-21

SHEET X OF X

DocuSign Envelope ID: EF8475C0-0470-4E52-B5B5-25D92AE11799

NOTES:

1. Adjust steel spacing to avoid conflict with P/S strands
2. Adjust tail length of stirrups to match deck cross slope and post tensioning ducts
3. For location of "SECTION A-A" and "SECTION B-B" see "BOX GIRDER LAYOUT" sheet
4. All reinforcements in splice region to be mechanically spliced

** Roughen surface of keyway and embedded surfaces of BOX GIRDER

INCOMPLETE PLAN FOR DESIGN STUDY
PRINTED DATE: 3-DEC-2021
Office of Structure Design
STATE OF CALIFORNIA

Dist	COUNTY	ROUTE	POST MILES TOTAL PROJECT	SHEET No.	TOTAL SHEETS

REGISTERED CIVIL ENGINEER X DATE

PLANS APPROVAL DATE

REGISTERED PROFESSIONAL ENGINEER Joey M Aquino III No. 58386 Exp. 12-31-22 CIVIL STATE OF CALIFORNIA

THE STATE OF CALIFORNIA OR ITS OFFICERS OR AGENTS SHALL NOT BE RESPONSIBLE FOR THE ACCURACY OR COMPLETENESS OF SCANNED COPIES OF THIS PLAN SHEET.

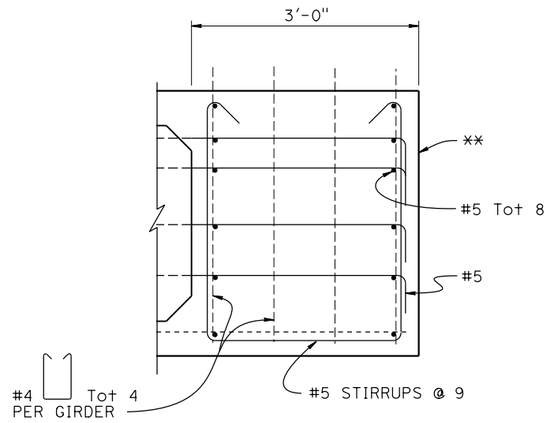

SECTION A-A

END DIAPHRAGM @ ABUTMENT

1" = 1'-0"

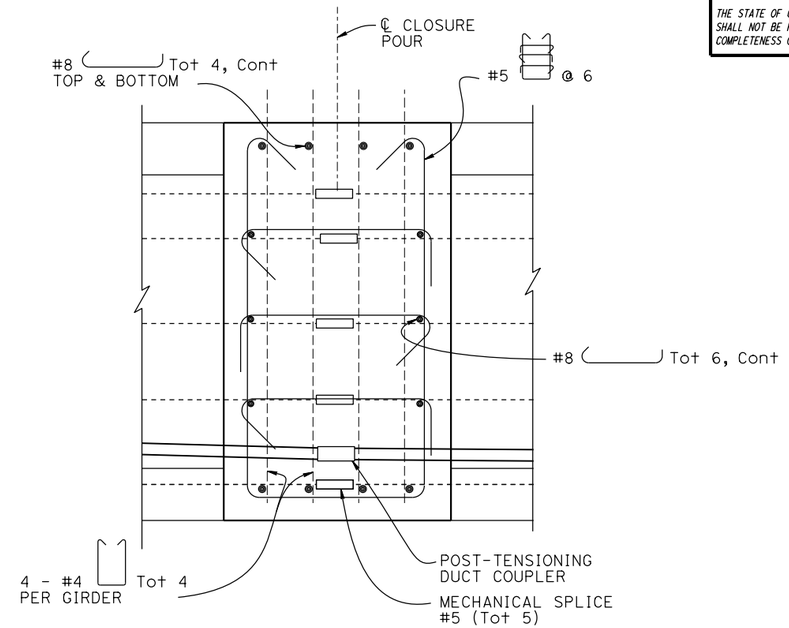

SECTION B-B

CLOSURE POUR

1½" = 1'-0"

	BY	CHECKED
DESIGN	Quang Nguyen	Alireza Yazdani Motlagh
DETAILS	Shadi Motalebi	Alireza Yazdani Motlagh
QUANTITIES	Joey Aquino	Jacqueline Koyama

STATE OF CALIFORNIA
DEPARTMENT OF TRANSPORTATION

DIVISION OF ENGINEERING SERVICES
BRIDGE DESIGN
BRANCH 3

BRIDGE No. 36-0125
POST MILE 15.49

KINGS CREEK BRIDGE (REPLACE)

PC/PS BOX GIRDER DETAILS No. 3

STRUCTURES DESIGN DETAIL SHEET (ENGLISH) (REVISION 3/10/2021)

DATE PLOTTED => 3-DEC-2021 TIME PLOTTED => 16:04
FILE => 36-0125-1-gd+03.dgn USERNAME => s136540

ORIGINAL SCALE IN INCHES FOR REDUCED PLANS 0 1 2 3

UNIT: 3578
PROJECT NUMBER & PHASE: 05160000781

COUNTY/ROUTE: Scr/9
CONTRACT No.: 05-1H4704

DISREGARD PRINTS BEARING EARLIER REVISION DATES

REVISION DATES: 8-2-21

SHEET X OF X

DocuSign Envelope ID: EF8475C0-0470-4E52-B5B5-25D92AE11799

Dist	COUNTY	ROUTE	POST MILES TOTAL PROJECT	SHEET No.	TOTAL SHEETS

INCOMPLETE PLAN FOR DESIGN STUDY

PRINTED DATE: 3-DEC-2021

Office of Structure Design

STATE OF CALIFORNIA

REGISTERED CIVIL ENGINEER X DATE

PLANS APPROVAL DATE

REGISTERED PROFESSIONAL ENGINEER Joey M Aquino III No. 58386 Exp. 12-31-22 CIVIL STATE OF CALIFORNIA

THE STATE OF CALIFORNIA OR ITS OFFICERS OR AGENTS SHALL NOT BE RESPONSIBLE FOR THE ACCURACY OR COMPLETENESS OF SCANNED COPIES OF THIS PLAN SHEET.

NOTE:

For "SECTION A-A" and "SECTION B-B", see "BRIDGE REMOVAL DETAILS No. 2"

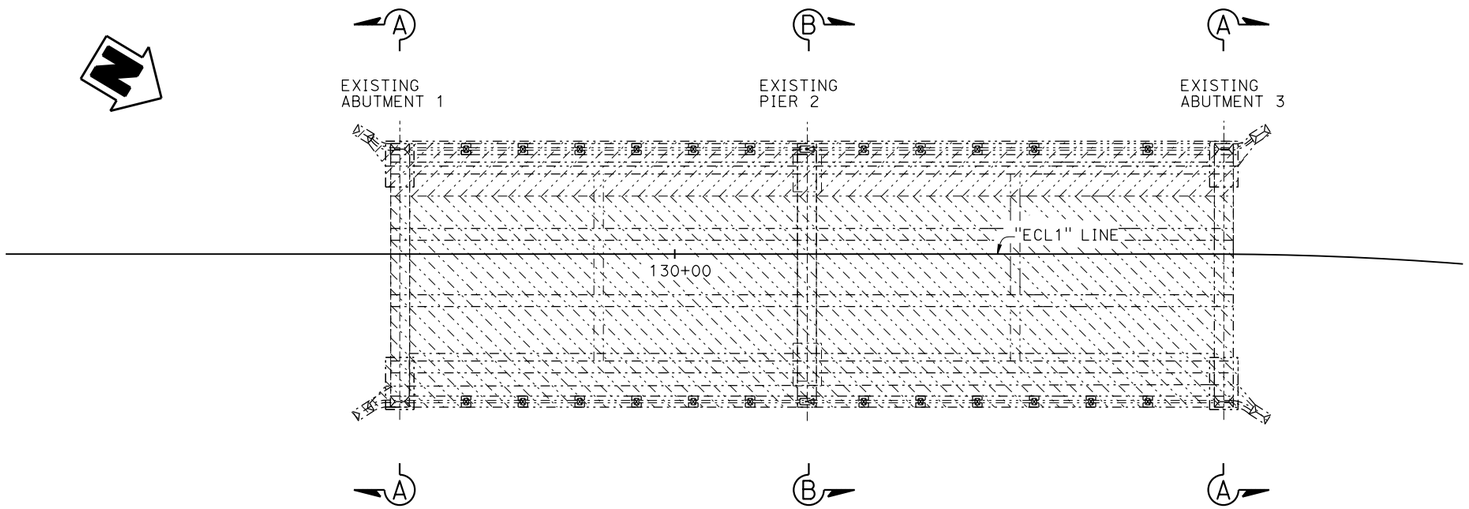

PLAN

1/8" = 1'-0"

LEGEND:

-·-·-·- Existing Structure

Limits of stage 1 Bridge Removal

Limits of stage 2 Bridge Removal

NOTE:
THE CONTRACTOR SHALL VERIFY ALL CONTROLLING FIELD DIMENSIONS BEFORE ORDERING OR FABRICATING ANY MATERIAL.

	BY	CHECKED
DESIGN	Quang Nguyen	Alireza Yazdani Motlagh
DETAILS	Shadi Motalebi	Alireza Yazdani Motlagh
QUANTITIES	Joey Aquino	Jacqueline Koyama

STATE OF CALIFORNIA DEPARTMENT OF TRANSPORTATION

DIVISION OF ENGINEERING SERVICES BRIDGE DESIGN BRANCH 3

BRIDGE No. 36-0125

POST MILE 15.49

KINGS CREEK BRIDGE (REPLACE)

BRIDGE REMOVAL DETAILS No. 1

STRUCTURES DESIGN DETAIL SHEET (ENGLISH) (REVISION 3/10/2021)

DATE PLOTTED => 3-DEC-2021 TIME PLOTTED => 16:04
FILE => 36-0125-o-remdt01.dgn USERNAME => s136540

ORIGINAL SCALE IN INCHES FOR REDUCED PLANS 0 1 2 3

UNIT: 3578
PROJECT NUMBER & PHASE: 05160000781

COUNTY/ROUTE: Scr/9
CONTRACT No.: 05-1H4704

DISREGARD PRINTS BEARING EARLIER REVISION DATES

REVISION DATES: 6-7-21

SHEET X OF X

DocuSign Envelope ID: EF8475C0-0470-4E52-B5B5-25D92AE11799

INCOMPLETE PLAN FOR DESIGN STUDY
PRINTED DATE: 3-DEC-2021
Office of Structure Design
STATE OF CALIFORNIA

Dist	COUNTY	ROUTE	POST MILES TOTAL PROJECT	SHEET No.	TOTAL SHEETS

REGISTERED CIVIL ENGINEER X DATE

PLANS APPROVAL DATE

REGISTERED PROFESSIONAL ENGINEER
Joey M Aquino III
No. 58386
Exp. 12-31-22
CIVIL
STATE OF CALIFORNIA

THE STATE OF CALIFORNIA OR ITS OFFICERS OR AGENTS SHALL NOT BE RESPONSIBLE FOR THE ACCURACY OR COMPLETENESS OF SCANNED COPIES OF THIS PLAN SHEET.

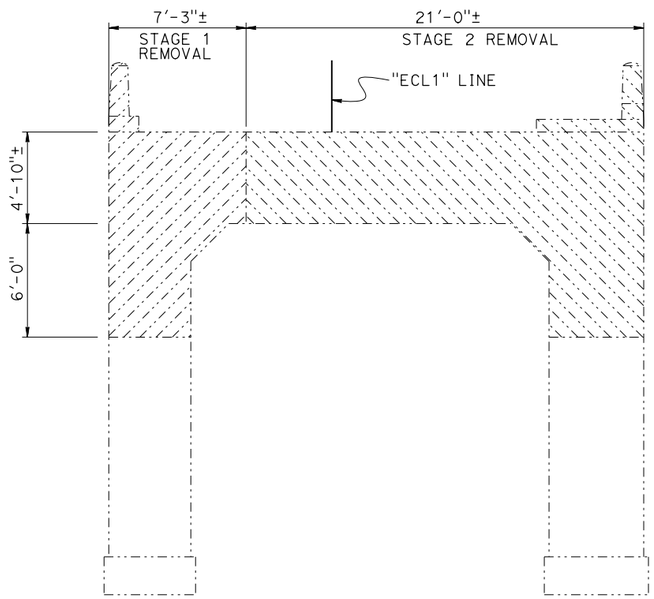

SECTION A-A
1/4" = 1'-0"

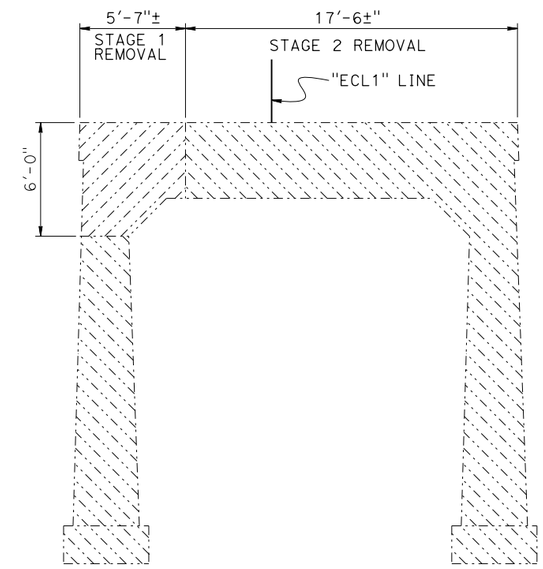

SECTION B-B
1/4" = 1'-0"

LEGEND:

Existing Structure

Limits of stage 1 Bridge Removal

Limits of stage 2 Bridge Removal

NOTE:
THE CONTRACTOR SHALL VERIFY ALL CONTROLLING FIELD DIMENSIONS BEFORE ORDERING OR FABRICATING ANY MATERIAL.

NOTE:
Entire superstructure will be removed

	BY	CHECKED
DESIGN	Quang Nguyen	Alireza Yazdani Motlagh
DETAILS	Shadi Motalebi	Alireza Yazdani Motlagh
QUANTITIES	Joey Aquino	Jacqueline Koyama

STATE OF CALIFORNIA
DEPARTMENT OF TRANSPORTATION

DIVISION OF ENGINEERING SERVICES
BRIDGE DESIGN
BRANCH 3

BRIDGE No. 36-0125
POST MILE 15.49

KINGS CREEK BRIDGE (REPLACE)
BRIDGE REMOVAL DETAILS No. 2

STRUCTURES DESIGN DETAIL SHEET
(ENGLISH) (REVISION 3/10/2021)

DATE PLOTTED => 3-DEC-2021 TIME PLOTTED => 16:04
FILE => 36-0125-o-remdt02.dgn USERNAME => s136540
ORIGINAL SCALE IN INCHES FOR REDUCED PLANS 0 1 2 3

UNIT: 3578
PROJECT NUMBER & PHASE: 05160000781

COUNTY/ROUTE: Scr/9
CONTRACT No.: 05-1H4704

DISREGARD PRINTS BEARING EARLIER REVISION DATES

REVISION DATES				SHEET	OF
6-7-21				X	X

DocuSign Envelope ID: EF8475C0-0470-4E52-B5B5-25D92AE11799

INCOMPLETE PLAN FOR DESIGN STUDY

PRINTED DATE: 3-DEC-2021

Office of Structure Design

STATE OF CALIFORNIA

Dist	COUNTY	ROUTE	POST MILES TOTAL PROJECT	SHEET No.	TOTAL SHEETS

REGISTERED CIVIL ENGINEER X DATE

PLANS APPROVAL DATE

REGISTERED PROFESSIONAL ENGINEER Joey M Aquino III No. 58386 Exp. 12-31-22 CIVIL STATE OF CALIFORNIA

THE STATE OF CALIFORNIA OR ITS OFFICERS OR AGENTS SHALL NOT BE RESPONSIBLE FOR THE ACCURACY OR COMPLETENESS OF SCANNED COPIES OF THIS PLAN SHEET.

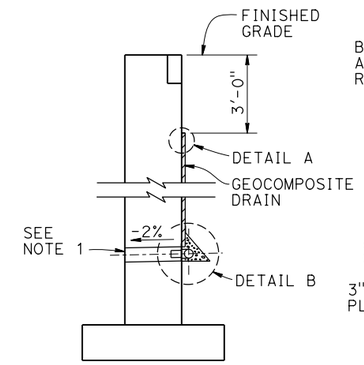

WALL SECTION

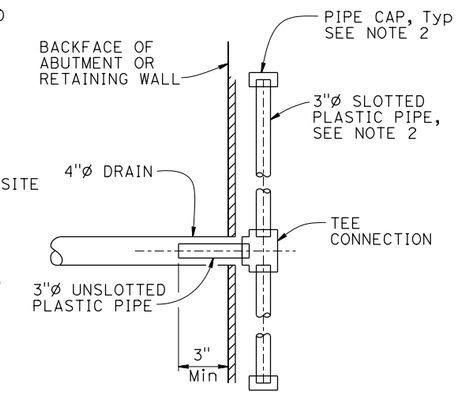

SECTION A-A

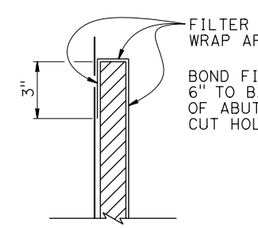

DETAIL A

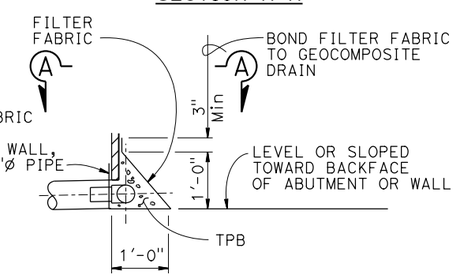

DETAIL B

NOTES:

1. 4"Ø drains at intermediate sag points and 25' maximum center to center (9'-0" C-C for Type 3 and 9'-3" C-C for Type 4 retaining walls). For walls adjacent to sidewalks or curbs, provide 4"Ø plastic pipe under the sidewalk to discharge through curb face. Exposed wall drains shall be located 3"± above finished grade.
2. Geocomposite drain, treated permeable base material and 3"Ø slotted plastic pipe continuous behind retaining wall or abutment. Cap ends of pipe. Provide "Tee" connection at each 4"Ø drain.
3. Connect the low end of plastic pipe to the main outlet pipe as applicable.

ALTERNATIVE TO BRIDGE DETAIL B0-3 / 3-1

WEEP HOLE AND GEOCOMPOSITE DRAIN DETAIL

NO SCALE

	BY	CHECKED
DESIGN	Quang Nguyen	Alireza Yazdani Motlagh
DETAILS	Shadi Motalebi	Alireza Yazdani Motlagh
QUANTITIES	Joey Aquino	Jacqueline Koyama

STATE OF CALIFORNIA DEPARTMENT OF TRANSPORTATION

DIVISION OF ENGINEERING SERVICES BRIDGE DESIGN BRANCH 3

BRIDGE No. 36-0125

POST MILE 15.49

KINGS CREEK BRIDGE (REPLACE)

STRUCTURE APPROACH DRAINAGE DETAILS

STRUCTURES DESIGN DETAIL SHEET (ENGLISH) (REVISION 3/10/2021)

DATE PLOTTED => 3-DEC-2021 TIME PLOTTED => 16:04

FILE => 36-0125-s-sadd.dgn USERNAME => s136540

ORIGINAL SCALE IN INCHES FOR REDUCED PLANS 0 1 2 3

UNIT: 3578

PROJECT NUMBER & PHASE: 05160000781

COUNTY/ROUTE: Scr/9

CONTRACT No.: 05-1H4704

DISREGARD PRINTS BEARING EARLIER REVISION DATES

REVISION DATES 7-1-21

SHEET X OF X

DocuSign Envelope ID: EF8475C0-0470-4E52-B5B5-25D92AE11799

Dist	COUNTY	ROUTE	POST MILES TOTAL PROJECT	SHEET No.	TOTAL SHEETS

INCOMPLETE PLAN FOR DESIGN STUDY
PRINTED DATE: 3-DEC-2021
Office of Structure Design
STATE OF CALIFORNIA

REGISTERED CIVIL ENGINEER X DATE

PLANS APPROVAL DATE

REGISTERED PROFESSIONAL ENGINEER Joey M Aquino III No. 58386 Exp. 12-31-22 CIVIL STATE OF CALIFORNIA

THE STATE OF CALIFORNIA OR ITS OFFICERS OR AGENTS SHALL NOT BE RESPONSIBLE FOR THE ACCURACY OR COMPLETENESS OF SCANNED COPIES OF THIS PLAN SHEET.

PROFILE GRADE
NO SCALE

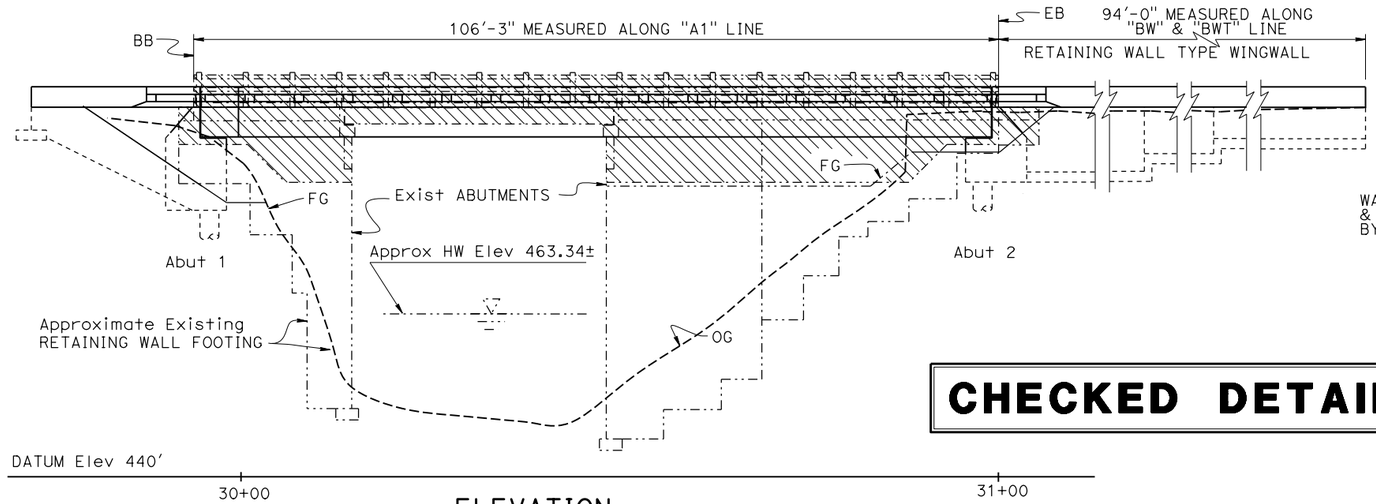

ELEVATION
1" = 10'

CHECKED DETAILS

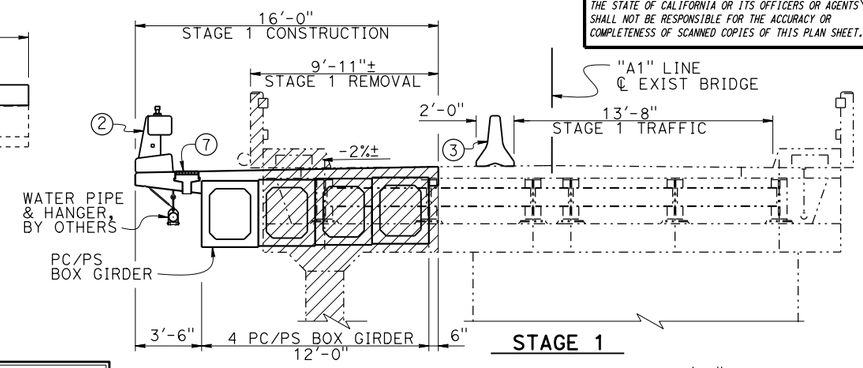

STAGE 1

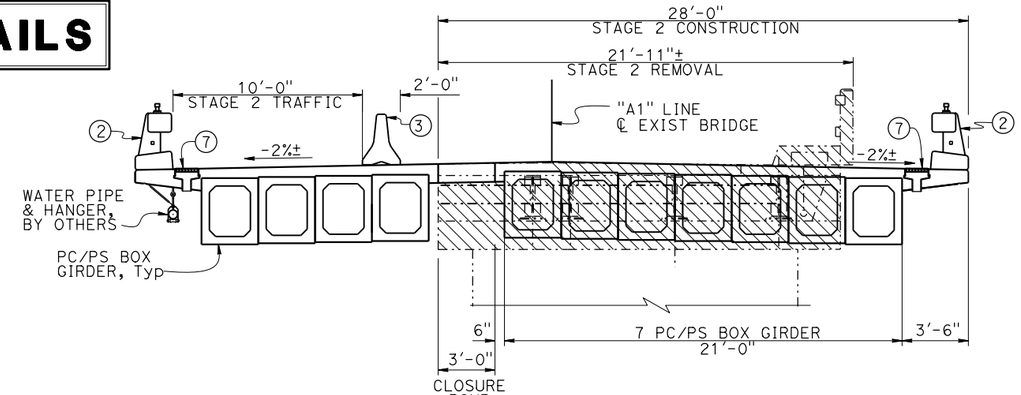

STAGE 2

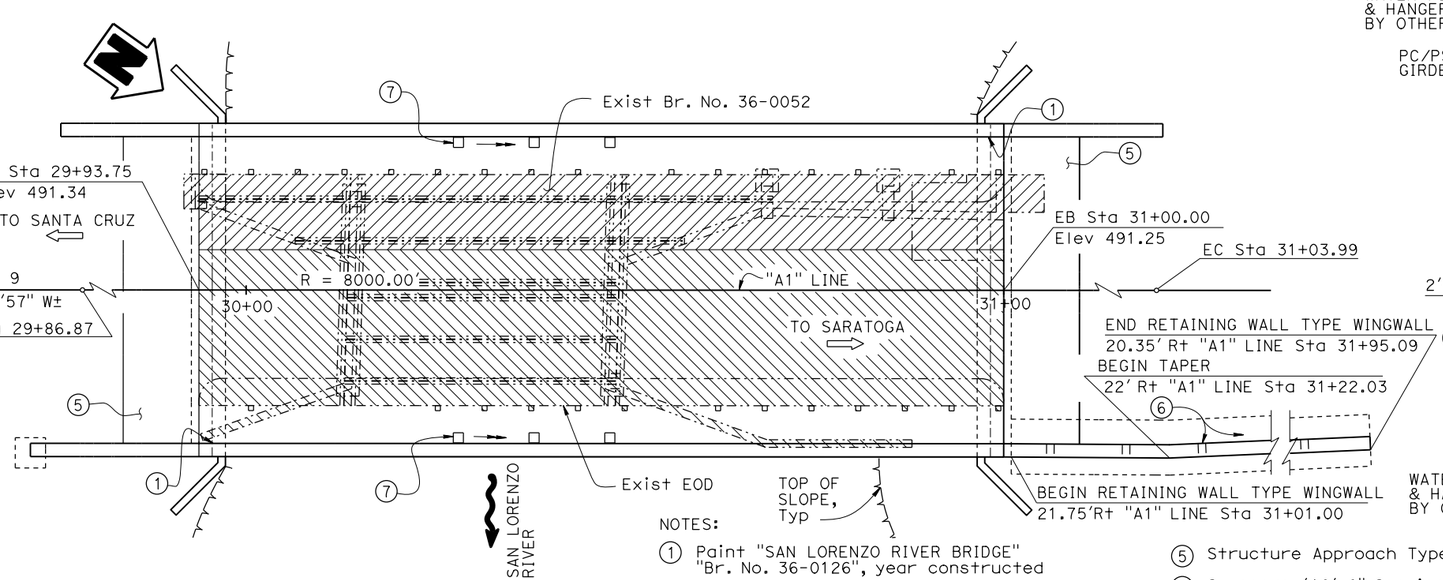

PLAN
1" = 10'

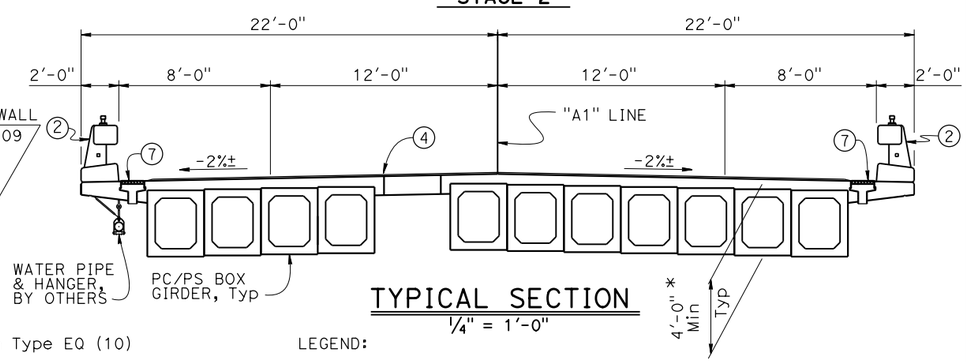

TYPICAL SECTION
¼" = 1'-0"

NOTES:

1. Paint "SAN LORENZO RIVER BRIDGE" "Br. No. 36-0126", year constructed
2. Concrete Barrier Type 85 (Mod)
3. Temporary Railing (Type K), see Roadway Plans
4. Polyester Concrete Overlay (1")
5. Structure Approach Type EQ (10)
6. Scuppers (10'-0" Spacing)
7. Deck Drains Type D-2 (Mod)

For "QUANTITIES", "GENERAL NOTES", "INDEX TO PLANS", "STANDARD PLANS" and "PILE DATA TABLE", see "INDEX TO PLANS" sheet

LEGEND:

- Existing structure (Br#36-0052)
- Limits of stage 1 Bridge removal
- Limits of stage 2 Bridge removal
- * Polyester concrete overlay thickness not included

NOTE:
THE CONTRACTOR SHALL VERIFY ALL CONTROLLING FIELD DIMENSIONS BEFORE ORDERING OR FABRICATING ANY MATERIAL.

X BRANCH CHIEF	DESIGN	BY Mufeed Khalaf	CHECKED Michael Bergman	LOAD & RESISTANCE FACTOR DESIGN	LIVE LOADING HL93 W/"LOW-BOY" & PERMIT DESIGN VEHICLE
	DETAILS	BY Shadi Motalebi	CHECKED Michael Bergman	LAYOUT BY Shadi Motalebi	CHECKED Mufeed Khalaf
	QUANTITIES	BY Joey Aquino	CHECKED Justin Woody	SPECIFICATIONS BY X	PLANS AND SPECS COMPARED X

STATE OF CALIFORNIA DEPARTMENT OF TRANSPORTATION

DIVISION OF ENGINEERING SERVICES BRIDGE DESIGN BRANCH 3

BRIDGE No. 36-0126
POST MILE 13.61

SAN LORENZO RIVER Br (REPLACE)
GENERAL PLAN

STRUCTURES DESIGN GENERAL PLAN SHEET (ENGLISH) (REVISION 3/10/2021)

DATE PLOTTED => 3-DEC-2021 TIME PLOTTED => 15:55
FILE => 36-0126-a-gp01.dgn USERNAME => s136540

ORIGINAL SCALE IN INCHES FOR REDUCED PLANS 0 1 2 3

UNIT: 3578
PROJECT NUMBER & PHASE: 05160000781

COUNTY/ROUTE: Scr/9
CONTRACT No.: 05-1H4704

DISREGARD PRINTS BEARING EARLIER REVISION DATES

REVISION DATES: 5-6-21

SHEET 1 OF X

DocuSign Envelope ID: EF8475C0-0470-4E52-B5B5-25D92AE11799

Dist	COUNTY	ROUTE	POST MILES TOTAL PROJECT	SHEET No.	TOTAL SHEETS

INCOMPLETE PLAN FOR DESIGN STUDY
PRINTED DATE: 3-DEC-2021
Office of Structure Design
STATE OF CALIFORNIA

REGISTERED CIVIL ENGINEER X DATE

PLANS APPROVAL DATE

REGISTERED PROFESSIONAL ENGINEER Joey M Aquino III No. 58386 Exp. 12-31-22 CIVIL STATE OF CALIFORNIA

THE STATE OF CALIFORNIA OR ITS OFFICERS OR AGENTS SHALL NOT BE RESPONSIBLE FOR THE ACCURACY OR COMPLETENESS OF SCANNED COPIES OF THIS PLAN SHEET.

GENERAL NOTES
LOAD AND RESISTANCE FACTOR DESIGN

DESIGN:
AASHTO LRFD Bridge Design Specifications, 2017 8th edition with California Amendments, preface dated April 2019

SEISMIC DESIGN:
Caltrans Seismic Design Criteria (SDC), Version 2.0 dated April 2019
See SITE SPECIFIC ARS CURVE

DEAD LOAD:
Includes 35 psf for future wearing surface

LIVE LOADING:
HL93 and permit design load
Permit Load not allowed during Stage 1 construction

REINFORCED CONCRETE:
fy = 60 ksi
f'c = 3.6 ksi
n = 8

PRESTRESSING STEEL:
See "PRESTRESSING NOTES" on "PC/PS BOX GIRDER DETAILS No. 1" sheet

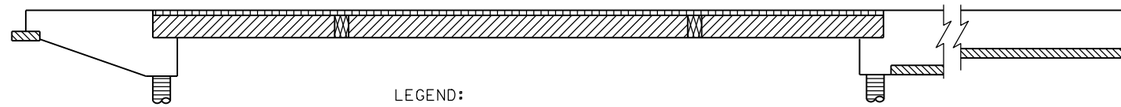

LEGEND:
- Structural Concrete, Bridge Polymer Fiber (4,000 psi at 28 days)
- PC/PS Box Girder, see "PC/PS BOX GIRDER LAYOUT" sheet
- Cast in Drill Hole Concrete Pile
- Structural Concrete, Bridge
- Structural Concrete, Bridge, Closure Pour, see "PC/PS BOX GIRDER DETAILS NO. 1" sheet
- Structural Concrete, Bridge Footing

INDEX TO PLANS

SHEET No.	TITLE
1	GENERAL PLAN
2	INDEX TO PLANS
3	DECK CONTOURS
4	FOUNDATION PLAN
5	ABUTMENT 1 LAYOUT
6	ABUTMENT 2 LAYOUT
7	ABUTMENT DETAILS No. 1
8	ABUTMENT DETAILS No. 2
9	ABUTMENT DETAILS No. 3
10	RETAINING WALL LAYOUT
11	TYPICAL SECTION
12	PC/PS BOX GIRDER LAYOUT
13	PC/PS BOX GIRDER DETAILS No. 1
14	PC/PS BOX GIRDER DETAILS No. 2
15	PC/PS BOX GIRDER DETAILS No. 3
16	BRIDGE REMOVAL DETAILS No .1
17	BRIDGE REMOVAL DETAILS No .2
18	LOG OF TEST BORINGS No. 1 OF 3
19	LOG OF TEST BORINGS No. 2 OF 3
20	LOG OF TEST BORINGS No. 3 OF 3

CONCRETE STRENGTH AND TYPE LIMITS
No Scale

PILE DATA TABLE

Location	Pile Type	Nominal Resistance (kips)		Design Tip Elevations (ft)	Specified Tip Elevation (ft)
		Compression	Tension		
Abutment 1	30" Ø CIDH	420	0	464.5(a) 474.0(c)	462.5
Abutment 2	30" Ø CIDH	405	0	456.5(a) 459.0(c)	454.5

NOTES:
1. The design tip elevations are controlled by: (a) Compression strength Limit State,
2. No end bearing resistance, only skin resistance contributes to pile capacity
3. Skin resistance of the top 15 feet layer (from existing finish grade) is neglected

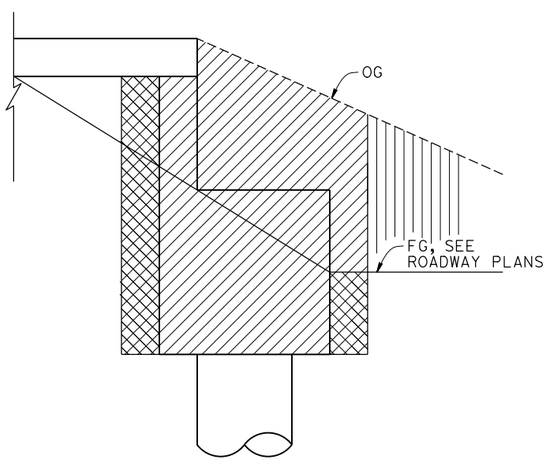

LEGEND:
- Structure Excavation
- Structure Backfill
- Roadway Excavation

LIMITS OF EXCAVATION AND BACKFILL
NO SCALE

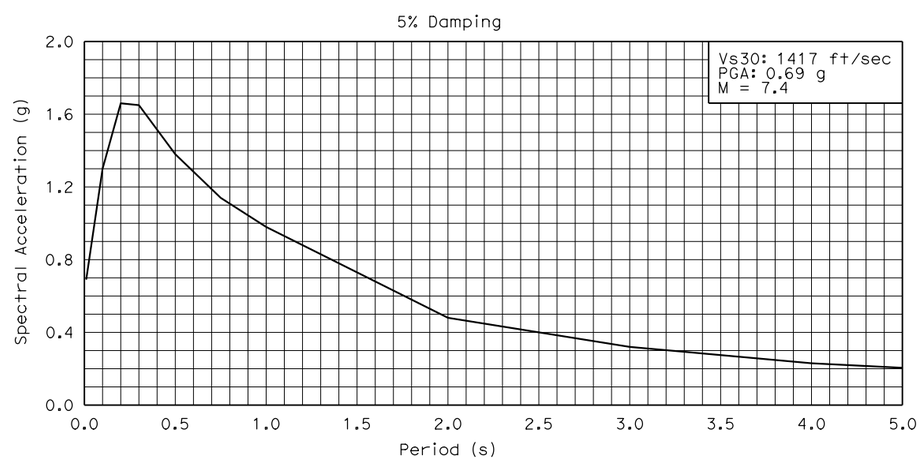

SITE SPECIFIC ARS CURVE
NO SCALE

STANDARD PLANS DATED 2010

A10A	ABBREVIATIONS (SHEET 1 OF 2)
A10B	ABBREVIATIONS (SHEET 2 OF 2)
A10C	LINES AND SYMBOLS (SHEET 1 OF 3)
A10D	LINES AND SYMBOLS (SHEET 2 OF 3)
A10E	LINES AND SYMBOLS (SHEET 3 OF 3)
A10F	LEGEND - SOIL (SHEET 1 OF 2)
A10G	LEGEND - SOIL (SHEET 2 OF 2)
A10H	LEGEND - ROCK
A62C	LIMITS OF PAYMENT FOR EXCAVATION AND BACKFILL BRIDGE
B0-1	BRIDGE DETAILS
B0-3	BRIDGE DETAILS
B0-5	BRIDGE DETAILS
B0-13	BRIDGE DETAILS
B3-1A	RETAINING WALL TYPE 1 (CASE 1)
B6-21	JOINT SEALS (MAXIMUM MOVEMENT RATING = 2")
B7-6	DECK DRAINS - TYPES D-1 AND D-2
B9-4	STRUCTURE APPROACH TYPE EQ (10)
RSP B11-83	CONCRETE BARRIER TYPE 85 DETAILS No. 1
RSP B11-84	CONCRETE BARRIER TYPE 85 DETAILS No. 2
RSP B11-85	CONCRETE BARRIER TYPE 85 DETAILS No. 3

STANDARD PLAN SHEET No.
DETAIL No.

	BY	CHECKED
DESIGN	Mufeed Khalaf	Michael Bergman
DETAILS	Shadi Motalebi	Michael Bergman
QUANTITIES	Joey Aquino	Justin Woody

STATE OF CALIFORNIA
DEPARTMENT OF TRANSPORTATION

DIVISION OF ENGINEERING SERVICES
BRIDGE DESIGN
BRANCH 3

BRIDGE No. 36-0126
POST MILE 13.61

SAN LORENZO RIVER Br (REPLACE)
INDEX TO PLANS

STRUCTURES DESIGN DETAIL SHEET (ENGLISH) (REVISION 3/10/2021)

DATE PLOTTED => 3-DEC-2021 TIME PLOTTED => 15:55
FILE => 36-0126-a-i+p.dgn USERNAME => s136540

ORIGINAL SCALE IN INCHES FOR REDUCED PLANS 0 1 2 3

UNIT: 3578
PROJECT NUMBER & PHASE: 05160000781

COUNTY/ROUTE: Scr/9
CONTRACT No.: 05-1H4704

DISREGARD PRINTS BEARING EARLIER REVISION DATES

REVISION DATES: 5-14-21

SHEET 2 OF X

DocuSign Envelope ID: EF8475C0-0470-4E52-B5B5-25D92AE11799

HYDROLOGIC SUMMARY

Drainage Area: 23.5 mi²

	Design Flood	Base Flood	Overtopping Flood/ Flood of Record
Frequency	50-yr	100-yr	NA
Discharge	9780 cfs	12,212 cfs	NA
Water Surface Elevation at Bridge	475.39 ft	479.48 ft	NA

Flood plain data are based upon information available when the plans were prepared and are shown to meet federal requirements. The accuracy of said information is not warranted by the State and interested or affected parties should make their own investigation.

SCOUR DATA TABLE

Support Location	Long Term (Degradation and Contraction) * Scour Elevation (ft)	Short Term (Local) Scour Depth (ft)
Abut 1	485.00	0.00
Abut 2	485.00	0.00

* There is no anticipated degradation or contraction scour; this is the approximate ground elevation

CURVE DATA

No. #	R	Δ	T	L
1	8,000.00	00°51′11"	59.56	119.12
2	7,978.00	00°02′34"	2.99	5.97

SOFFIT ELEVATIONS

1 - 488.28
2 - 488.26
3 - 488.28
4 - 488.31
5 - 488.30

Dist	COUNTY	ROUTE	POST MILES TOTAL PROJECT	SHEET No.	TOTAL SHEETS

REGISTERED CIVIL ENGINEER X DATE

PLANS APPROVAL DATE

REGISTERED PROFESSIONAL ENGINEER Joey M Aquino III No. 58386 Exp. 12-31-22 CIVIL STATE OF CALIFORNIA

THE STATE OF CALIFORNIA OR ITS OFFICERS OR AGENTS SHALL NOT BE RESPONSIBLE FOR THE ACCURACY OR COMPLETENESS OF SCANNED COPIES OF THIS PLAN SHEET.

NOTE:

Existing utilities in conflict will be relocated by others prior to bridge construction

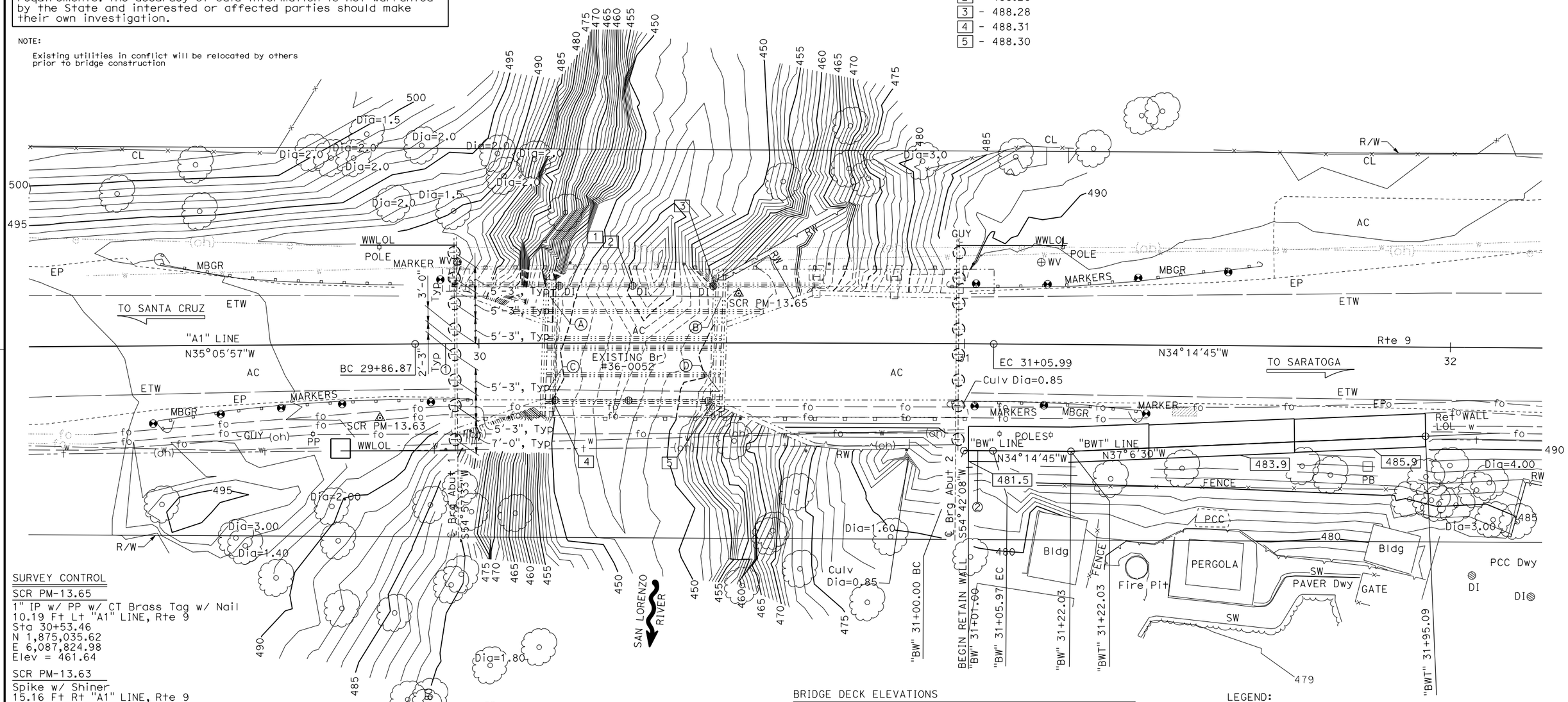

SURVEY CONTROL

SCR PM-13.65
1" IP w/ PP w/ CT Brass Tag w/ Nail
10.19 Ft Lt "A1" LINE, Rte 9
Sta 30+53.46
N 1,875,035.62
E 6,087,824.98
Elev = 461.64

SCR PM-13.63
Spike w/ Shiner
15.16 Ft Rt "A1" LINE, Rte 9
Sta 29+79.51
N 1,874,989.47
E 6,087,888.06
Elev = 491.77

SURVEY MONUMENTS SHOWN ON THE FOUNDATION PLAN ARE FOR DESIGN PURPOSES ONLY. FOR COMPLETE LIST OF SURVEY MONUMENTS FOR THIS PROJECT, SEE ROADWAY PLANS.

BRIDGE DECK ELEVATIONS

Ⓐ - 9.61′ Lt "A1" LINE, Sta 30+14.63, Elev = 491.12
Ⓑ - 9.46′ Lt "A1" LINE, Sta 30+49.93, Elev = 491.10
Ⓒ - 9.55′ Rt "A1" LINE, Sta 30+14.11, Elev = 491.09
Ⓓ - 10.00′ Rt "A1" LINE, Sta 30+49.48, Elev = 491.08

LEGEND:

Existing Structure
XX.X Bottom of footing elevation
30"ø CIDH Pile

PRELIMINARY INVESTIGATIONS BRANCH							
SCALE: 1" = 10′	VERT. DATUM: NAVD88	SURVEYED	BY DISTRICT	CHECKED E. GONZALES	DESIGN	BY Mufeed Khalaf	CHECKED Michael Bergman
	HORIZ. DATUM: NAD83 (1991.35)	DRAFTED	BY S. ZHENG	CHECKED H. PEREZ	DETAILS	BY Shadi Motalebi	CHECKED Michael Bergman
					QUANTITIES	BY Joey Aquino	CHECKED Justin Woody

STATE OF CALIFORNIA DEPARTMENT OF TRANSPORTATION

DIVISION OF ENGINEERING SERVICES BRIDGE DESIGN BRANCH 3

BRIDGE No. 36-0126 POST MILE 13.61

SAN LORENZO RIVER Br (REPLACE)

FOUNDATION PLAN

STRUCTURES FOUNDATION PLAN SHEET (ENGLISH) (REVISION 4/21/2021)

DATE PLOTTED => 3-DEC-2021 TIME PLOTTED => 15:55
FILE => 36-0126-e-fpl01_revised.dgn USERNAME => s136540

ORIGINAL SCALE IN INCHES FOR REDUCED PLANS 0 1 2 3

UNIT: 3646
PROJECT NUMBER & PHASE: 05160000781

COUNTY/ROUTE: SCr/009
CONTRACT No.: 05-1H4704

DISREGARD PRINTS BEARING EARLIER REVISION DATES

REVISION DATES 4/28/21

SHEET X OF X

DocuSign Envelope ID: EF8475C0-0470-4E52-B5B5-25D92AE11799

INCOMPLETE PLAN FOR DESIGN STUDY
PRINTED DATE: 3-DEC-2021
Office of Structure Design
STATE OF CALIFORNIA

Dist	COUNTY	ROUTE	POST MILES TOTAL PROJECT	SHEET No.	TOTAL SHEETS

REGISTERED CIVIL ENGINEER X DATE

PLANS APPROVAL DATE

REGISTERED PROFESSIONAL ENGINEER Joey M Aquino III No. 58386 Exp. 12-31-22 CIVIL STATE OF CALIFORNIA

THE STATE OF CALIFORNIA OR ITS OFFICERS OR AGENTS SHALL NOT BE RESPONSIBLE FOR THE ACCURACY OR COMPLETENESS OF SCANNED COPIES OF THIS PLAN SHEET.

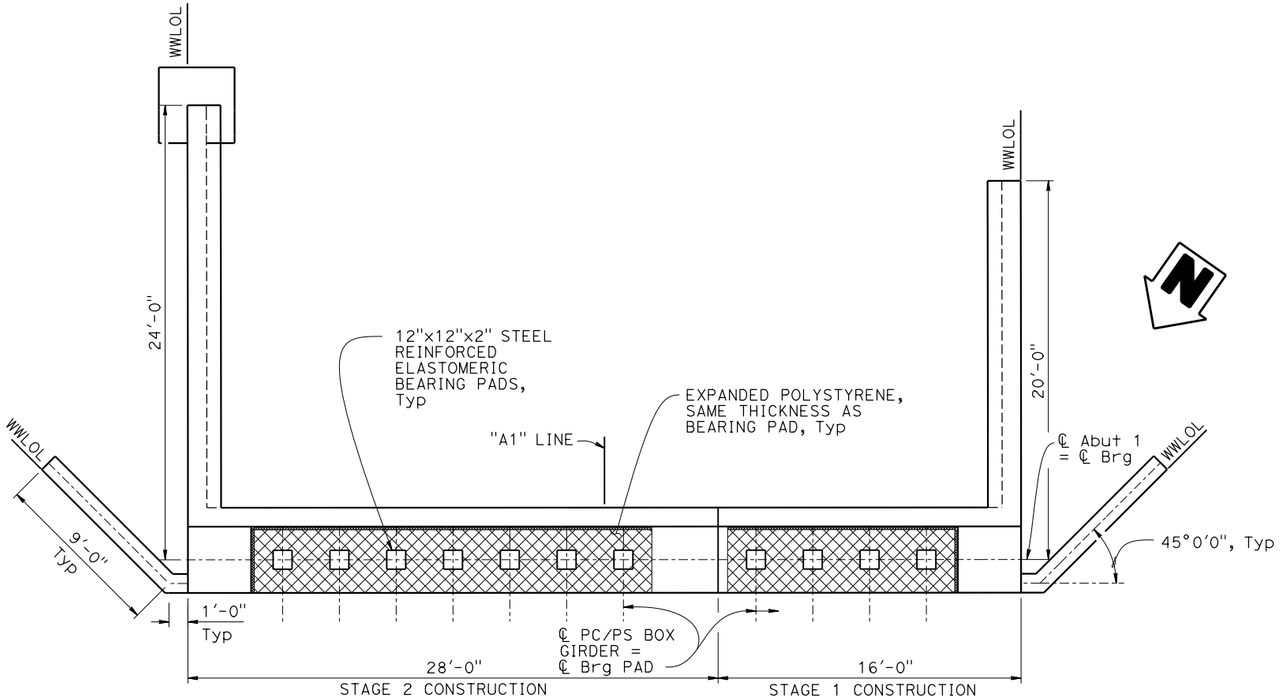

ABUTMENT PLAN
1/4" = 1'-0"

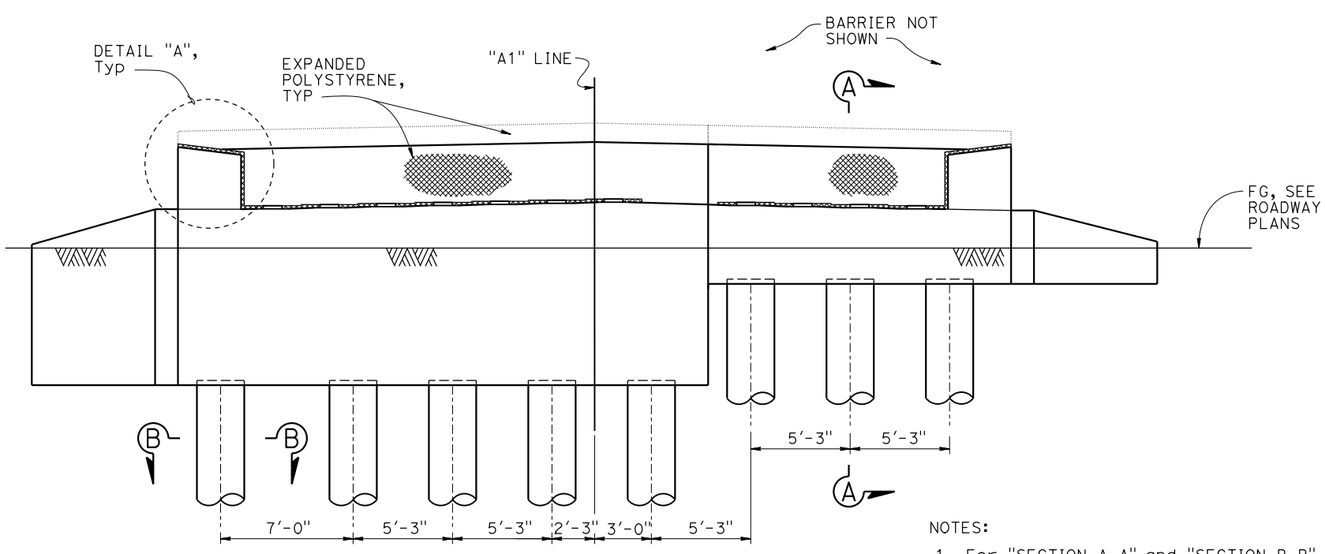

ABUTMENT ELEVATION
1/4" = 1'-0"

NOTES:

1. For "SECTION A-A" and "SECTION B-B", see "ABUTMENT DETAILS No. 1" sheet
2. For "DETAIL A", see "ABUTMENT DETAILS No. 2" sheet

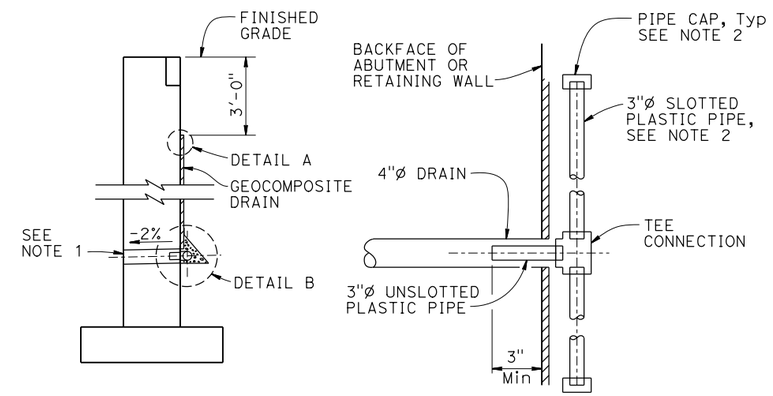

WALL SECTION

SECTION A-A

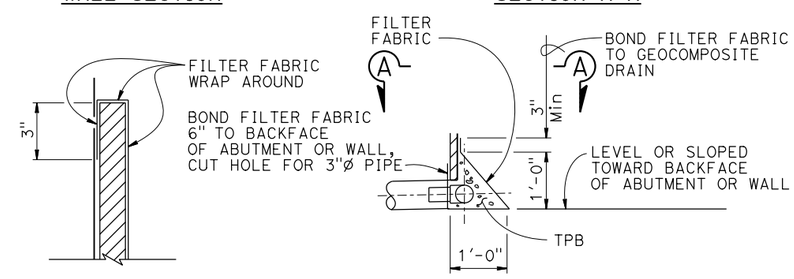

DETAIL A

DETAIL B

NOTES:

1. 4"Ø drains at intermediate sag points and 25' maximum center to center (9'-0" C-C for Type 3 and 9'-3" C-C for Type 4 retaining walls). For walls adjacent to sidewalks or curbs, provide 4"Ø plastic pipe under the sidewalk to discharge through curb face. Exposed wall drains shall be located 3"± above finished grade.
2. Geocomposite drain, treated permeable base material and 3"Ø slotted plastic pipe continuous behind retaining wall or abutment. Cap ends of pipe. Provide "Tee" connection at each 4"Ø drain.
3. Connect the low end of plastic pipe to the main outlet pipe as applicable.

ALTERNATIVE TO BRIDGE DETAIL B0-3 / 3-1

WEEP HOLE AND GEOCOMPOSITE DRAIN DETAIL
NO SCALE

	BY	CHECKED
DESIGN	Mufeed Khalaf	Michael Bergman
DETAILS	Shadi Motalebi	Michael Bergman
QUANTITIES	Joey Aquino	Justin Woody

STATE OF CALIFORNIA DEPARTMENT OF TRANSPORTATION

DIVISION OF ENGINEERING SERVICES BRIDGE DESIGN BRANCH 3

BRIDGE No. 36-0126
POST MILE 13.61

SAN LORENZO RIVER Br (REPLACE)
ABUTMENT 1 LAYOUT

STRUCTURES DESIGN DETAIL SHEET (ENGLISH) (REVISION 3/10/2021)

DATE PLOTTED => 3-DEC-2021 TIME PLOTTED => 15:55
FILE => 36-0126-f-a01_lo1.dgn USERNAME => s136540
ORIGINAL SCALE IN INCHES FOR REDUCED PLANS 0 1 2 3

UNIT: 3578
PROJECT NUMBER & PHASE: 05160000781

COUNTY/ROUTE: Scr/9
CONTRACT No.: 05-1H4704

DISREGARD PRINTS BEARING EARLIER REVISION DATES

REVISION DATES: 5-11-21

SHEET X OF X

DocuSign Envelope ID: EF8475C0-0470-4E52-B5B5-25D92AE11799

INCOMPLETE PLAN FOR DESIGN STUDY
PRINTED DATE: 3-DEC-2021
Office of Structure Design
STATE OF CALIFORNIA

Dist	COUNTY	ROUTE	POST MILES TOTAL PROJECT	SHEET No.	TOTAL SHEETS

REGISTERED CIVIL ENGINEER X DATE
PLANS APPROVAL DATE

REGISTERED PROFESSIONAL ENGINEER
Joey M Aquino III
No. 58386
Exp. 12-31-22
CIVIL
STATE OF CALIFORNIA

THE STATE OF CALIFORNIA OR ITS OFFICERS OR AGENTS SHALL NOT BE RESPONSIBLE FOR THE ACCURACY OR COMPLETENESS OF SCANNED COPIES OF THIS PLAN SHEET.

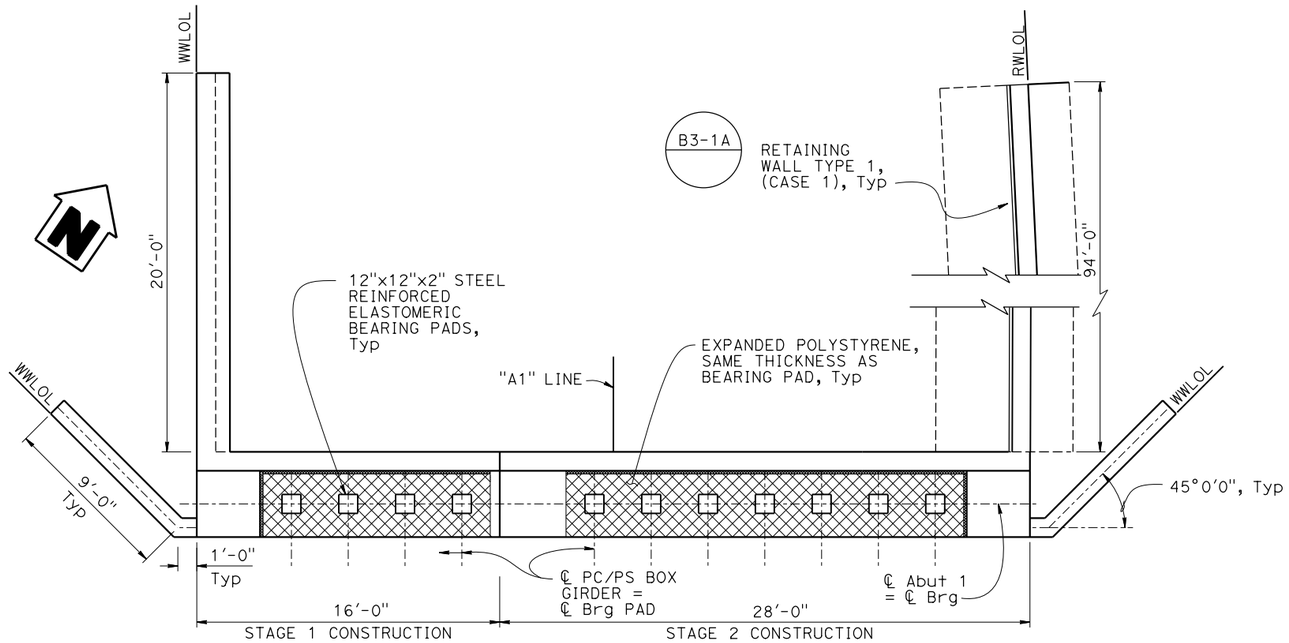

ABUTMENT PLAN
1/4" = 1'-0"

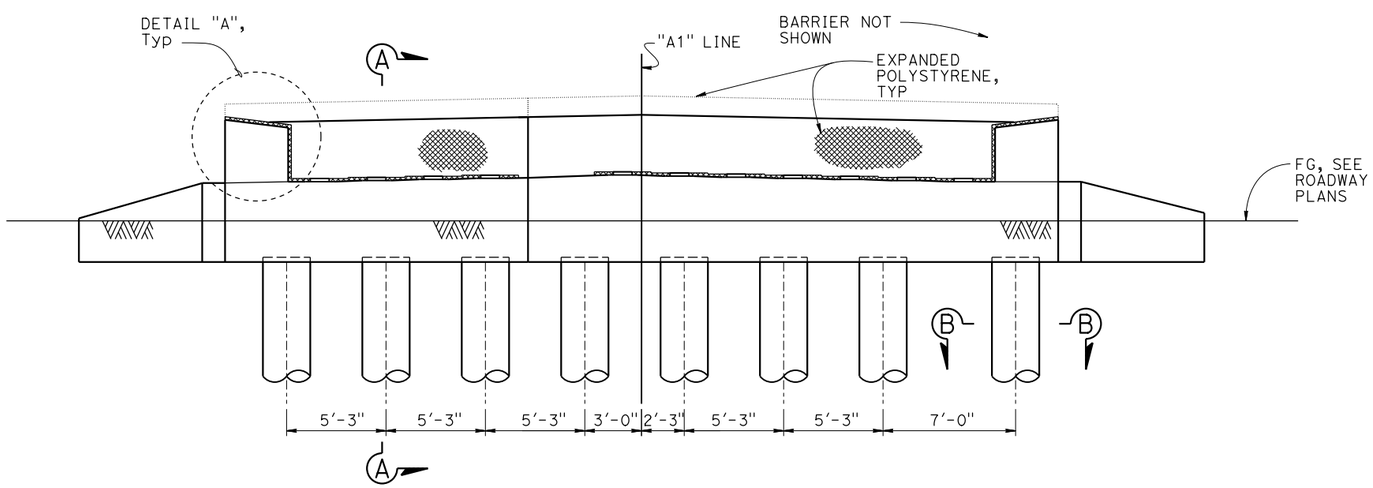

ABUTMENT ELEVATION
1/4" = 1'-0"

NOTES:

1. For "SECTION A-A" and "SECTION B-B", see "ABUTMENT DETAILS No. 1" sheet
2. For "DETAIL A", see "ABUTMENT DETAILS No. 2" sheet
3. For retaining wall layout line, see "RETAINING WALL LAYOUT" sheet

	BY	CHECKED
DESIGN	Mufeed Khalaf	Michael Bergman
DETAILS	Shadi Motalebi	Michael Bergman
QUANTITIES	Joey Aquino	Justin Woody

STATE OF CALIFORNIA
DEPARTMENT OF TRANSPORTATION

DIVISION OF ENGINEERING SERVICES
BRIDGE DESIGN
BRANCH 3

BRIDGE No. 36-0126
POST MILE 13.61

SAN LORENZO RIVER Br (REPLACE)
ABUTMENT 2 LAYOUT

STRUCTURES DESIGN DETAIL SHEET (ENGLISH) (REVISION 3/10/2021)

DATE PLOTTED => 3-DEC-2021 TIME PLOTTED => 15:55
FILE => 36-0126-f-a02_1o02.dgn USERNAME => s136540
ORIGINAL SCALE IN INCHES FOR REDUCED PLANS 0 1 2 3

UNIT: 3578
PROJECT NUMBER & PHASE: 05160000781
COUNTY/ROUTE: Scr/9
CONTRACT No.: 05-1H4704

DISREGARD PRINTS BEARING EARLIER REVISION DATES

REVISION DATES: 5-12-21

SHEET X OF X

DocuSign Envelope ID: EF8475C0-0470-4E52-B5B5-25D92AE11799

Dist	COUNTY	ROUTE	POST MILES TOTAL PROJECT	SHEET No.	TOTAL SHEETS

INCOMPLETE PLAN FOR DESIGN STUDY
PRINTED DATE: 3-DEC-2021
Office of Structure Design
STATE OF CALIFORNIA

REGISTERED CIVIL ENGINEER X DATE
PLANS APPROVAL DATE

REGISTERED PROFESSIONAL ENGINEER Joey M Aquino III No. 58386 Exp. 12-31-22 CIVIL STATE OF CALIFORNIA

THE STATE OF CALIFORNIA OR ITS OFFICERS OR AGENTS SHALL NOT BE RESPONSIBLE FOR THE ACCURACY OR COMPLETENESS OF SCANNED COPIES OF THIS PLAN SHEET.

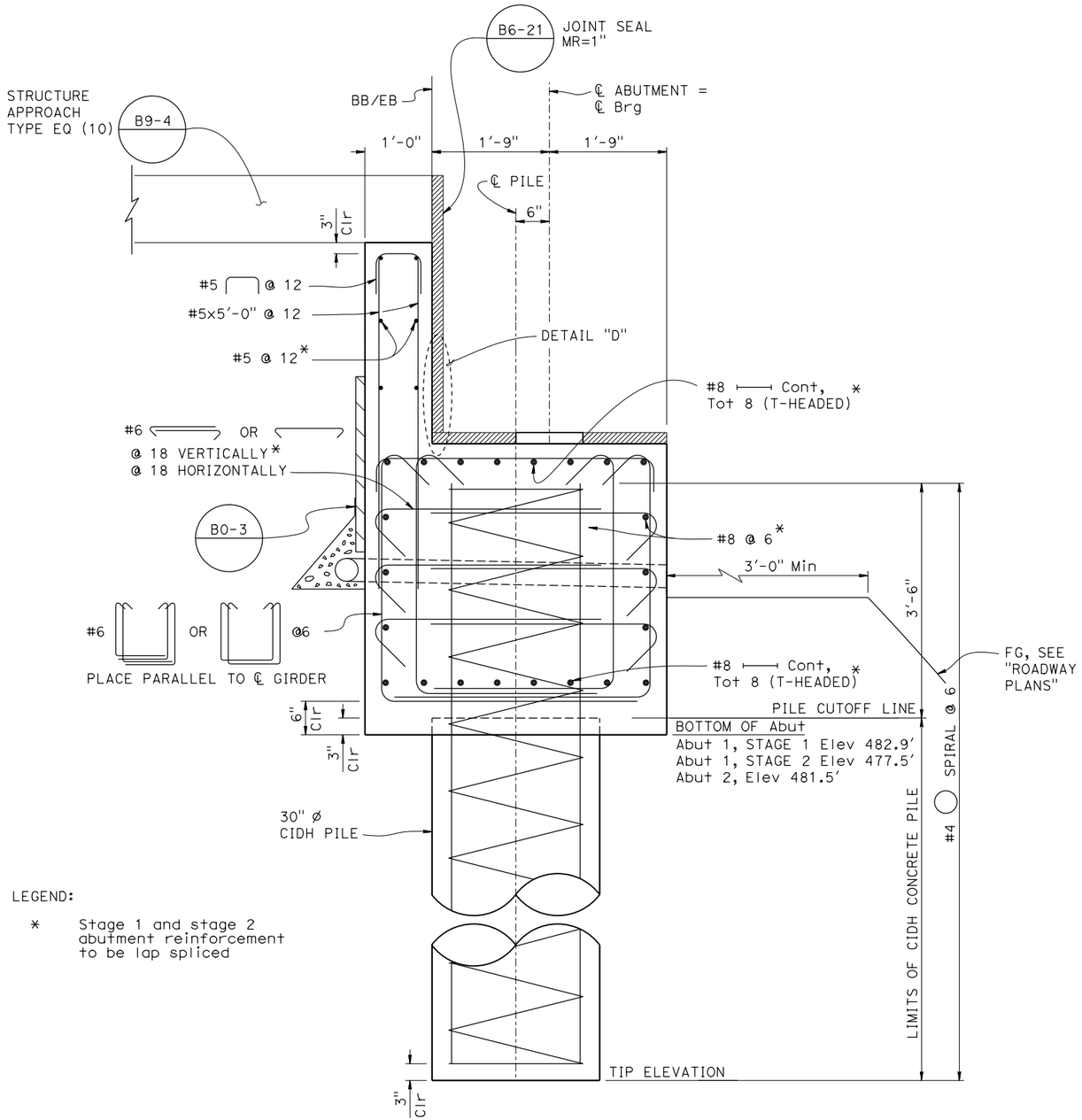

LEGEND:

* Stage 1 and stage 2 abutment reinforcement to be lap spliced

SECTION A-A
1" = 1'-0"

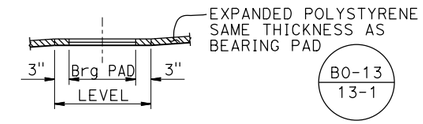

BEARING PAD DETAIL
NO SCALE
Details typical at all bearing pads

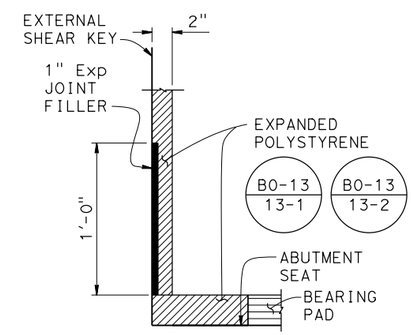

DETAIL E
NO SCALE

For location of "DETAIL E", see "DETAIL A" on "ABUTMENT DETAILS No. 2" sheet

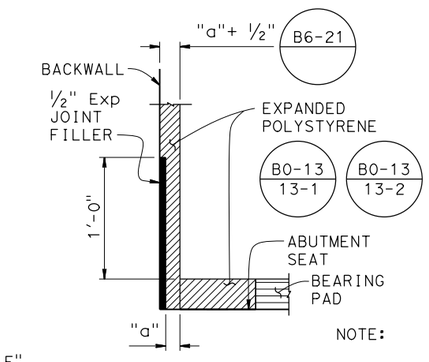

NOTE:

DETAIL D
NO SCALE

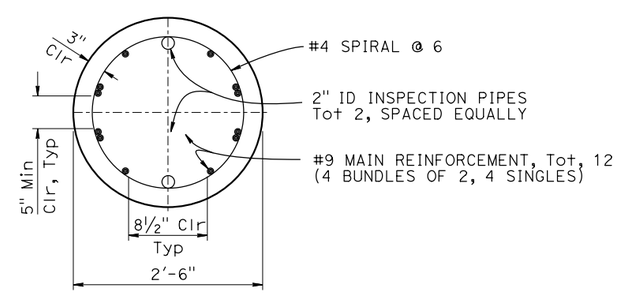

NOTES:

All piles reinforcements to be Epoxy coated

SECTION B-B
1" = 1'-0"

	BY	CHECKED
DESIGN	Mufeed Khalaf	Michael Bergman
DETAILS	Shadi Motalebi	Michael Bergman
QUANTITIES	Joey Aquino	Justin Woody

STATE OF CALIFORNIA
DEPARTMENT OF TRANSPORTATION

DIVISION OF ENGINEERING SERVICES
BRIDGE DESIGN
BRANCH 3

BRIDGE No. 36-0126
POST MILE 13.61

SAN LORENZO RIVER Br (REPLACE)
ABUTMENT DETAILS No. 1

STRUCTURES DESIGN DETAIL SHEET (ENGLISH) (REVISION 3/10/2021)

DATE PLOTTED => 3-DEC-2021 TIME PLOTTED => 15:55
FILE => 36-0126-f-ad+01.dgn USERNAME => s136540

ORIGINAL SCALE IN INCHES FOR REDUCED PLANS 0 1 2 3

UNIT: 3578
PROJECT NUMBER & PHASE: 05160000781

COUNTY/ROUTE: Scr/9
CONTRACT No.: 05-1H4704

DISREGARD PRINTS BEARING EARLIER REVISION DATES

REVISION DATES 5-13-21

SHEET X OF X

DocuSign Envelope ID: EF8475C0-0470-4E52-B5B5-25D92AE11799

INCOMPLETE PLAN FOR DESIGN STUDY
PRINTED DATE: 3-DEC-2021
Office of Structure Design
STATE OF CALIFORNIA

Dist	COUNTY	ROUTE	POST MILES TOTAL PROJECT	SHEET No.	TOTAL SHEETS

REGISTERED CIVIL ENGINEER X DATE

PLANS APPROVAL DATE

REGISTERED PROFESSIONAL ENGINEER Joey M Aquino III No. 58386 Exp. 12-31-22 CIVIL STATE OF CALIFORNIA

THE STATE OF CALIFORNIA OR ITS OFFICERS OR AGENTS SHALL NOT BE RESPONSIBLE FOR THE ACCURACY OR COMPLETENESS OF SCANNED COPIES OF THIS PLAN SHEET.

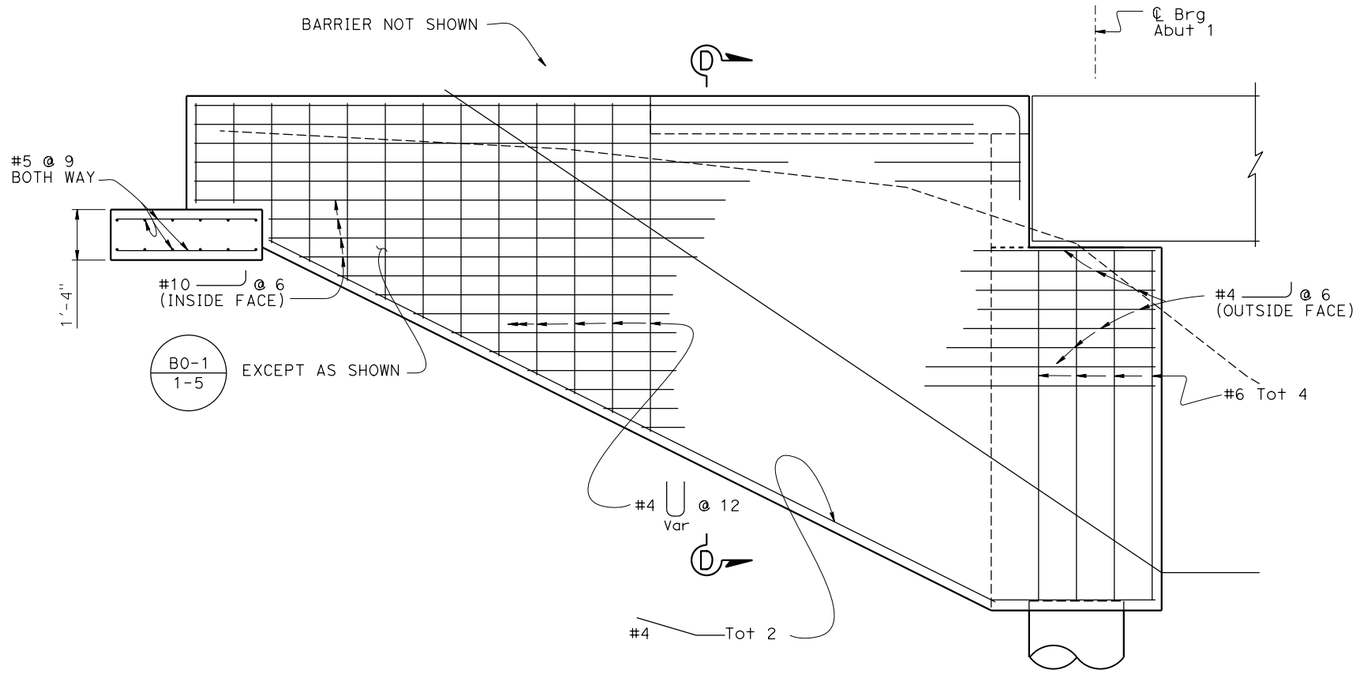

WINGWALL ELEVATION
½" = 1'-0"

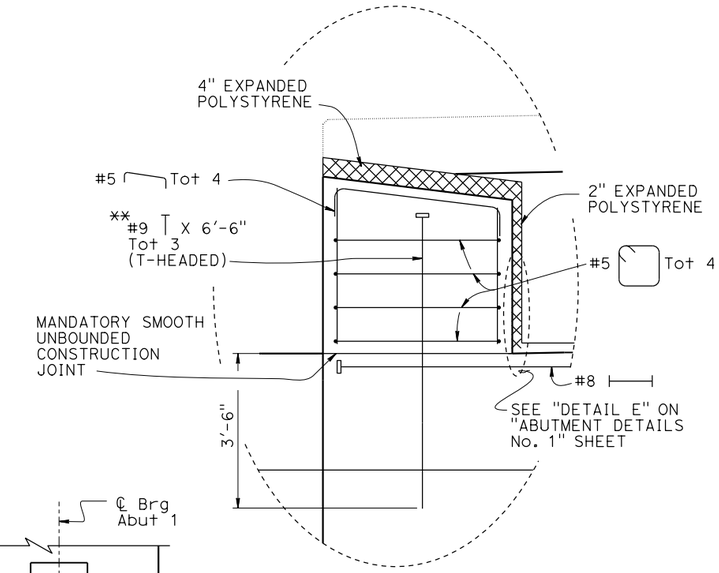

DETAIL A
¾" = 1'-0"

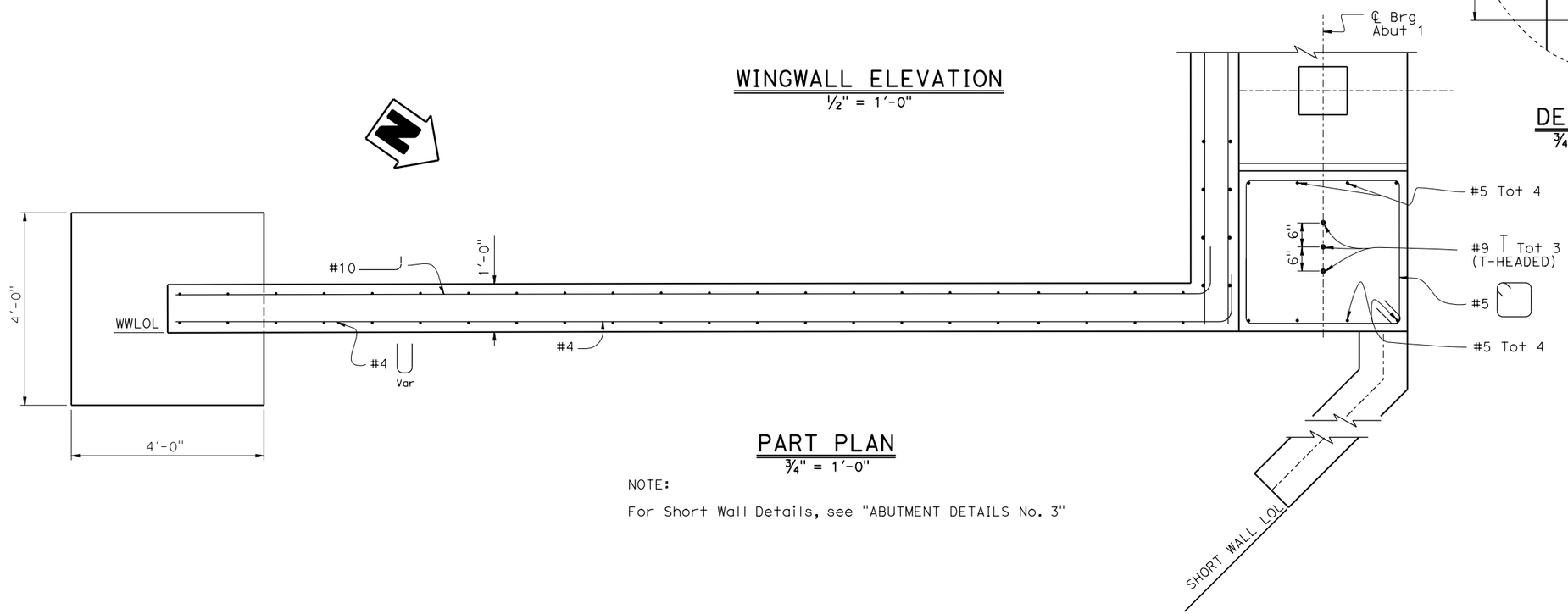

PART PLAN
¾" = 1'-0"

NOTE:

For Short Wall Details, see "ABUTMENT DETAILS No. 3"

DESIGN	BY Mufeed Khalaf	CHECKED Michael Bergman	
DETAILS	BY Shadi Motalebi	CHECKED Michael Bergman	
QUANTITIES	BY Joey Aquino	CHECKED Justin Woody	

STATE OF CALIFORNIA DEPARTMENT OF TRANSPORTATION

DIVISION OF ENGINEERING SERVICES BRIDGE DESIGN BRANCH 3

BRIDGE No. 36-0126
POST MILE 13.61

SAN LORENZO RIVER Br (REPLACE)
ABUTMENT DETAILS No. 2

STRUCTURES DESIGN DETAIL SHEET (ENGLISH) (REVISION 3/10/2021)

DATE PLOTTED => 3-DEC-2021 TIME PLOTTED => 15:55
FILE => 36-0126-f-adt02.dgn USERNAME => s136540

ORIGINAL SCALE IN INCHES FOR REDUCED PLANS 0 1 2 3

UNIT: 3578
PROJECT NUMBER & PHASE: 05160000781

COUNTY/ROUTE: Scr/9
CONTRACT No.: 05-1H4704

DISREGARD PRINTS BEARING EARLIER REVISION DATES

REVISION DATES: 8-2-21

SHEET X OF X

DocuSign Envelope ID: EF8475C0-0470-4E52-B5B5-25D92AE11799

INCOMPLETE PLAN FOR DESIGN STUDY
PRINTED DATE: 3-DEC-2021
Office of Structure Design
STATE OF CALIFORNIA

Dist	COUNTY	ROUTE	POST MILES TOTAL PROJECT	SHEET No.	TOTAL SHEETS

REGISTERED CIVIL ENGINEER X DATE

PLANS APPROVAL DATE

REGISTERED PROFESSIONAL ENGINEER
Joey M Aquino III
No. 58386
Exp. 12-31-22
CIVIL
STATE OF CALIFORNIA

THE STATE OF CALIFORNIA OR ITS OFFICERS OR AGENTS SHALL NOT BE RESPONSIBLE FOR THE ACCURACY OR COMPLETENESS OF SCANNED COPIES OF THIS PLAN SHEET.

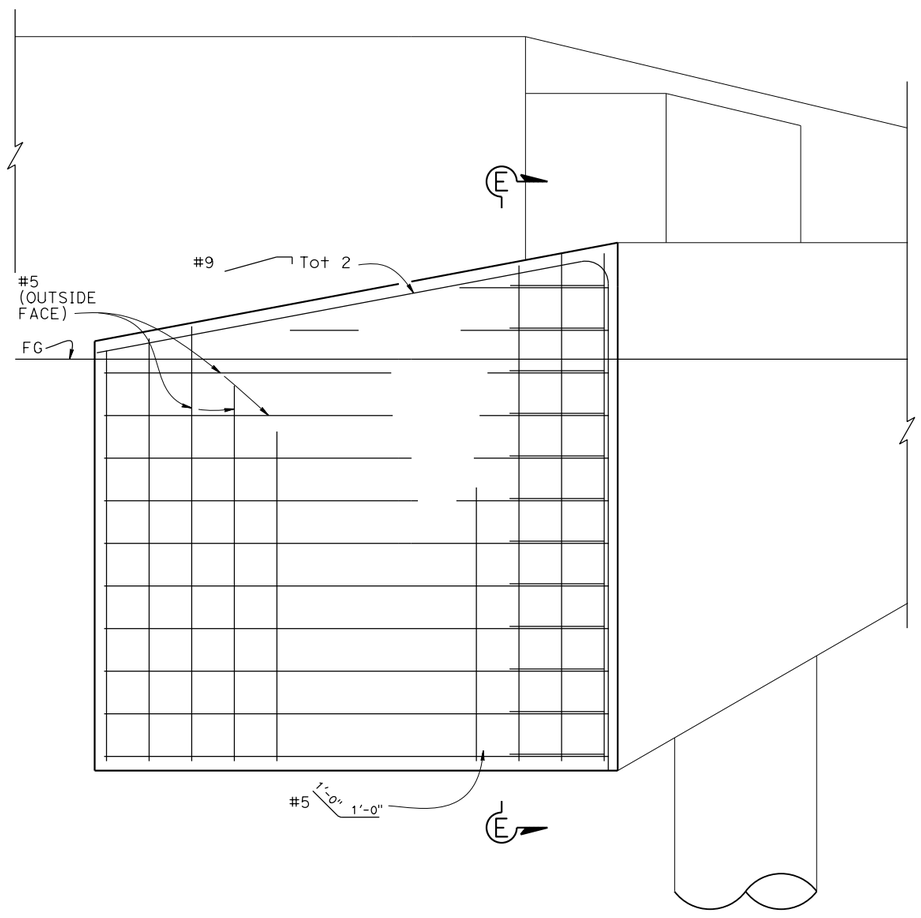

SHORT WALL ELEVATION
3/4" = 1'-0"

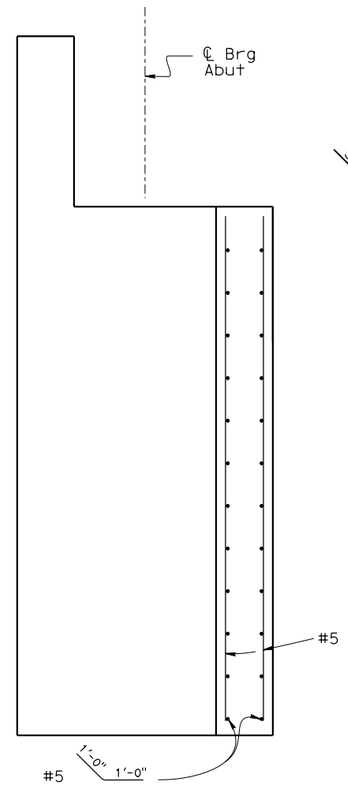

SECTION E-E
3/4" = 1'-0"

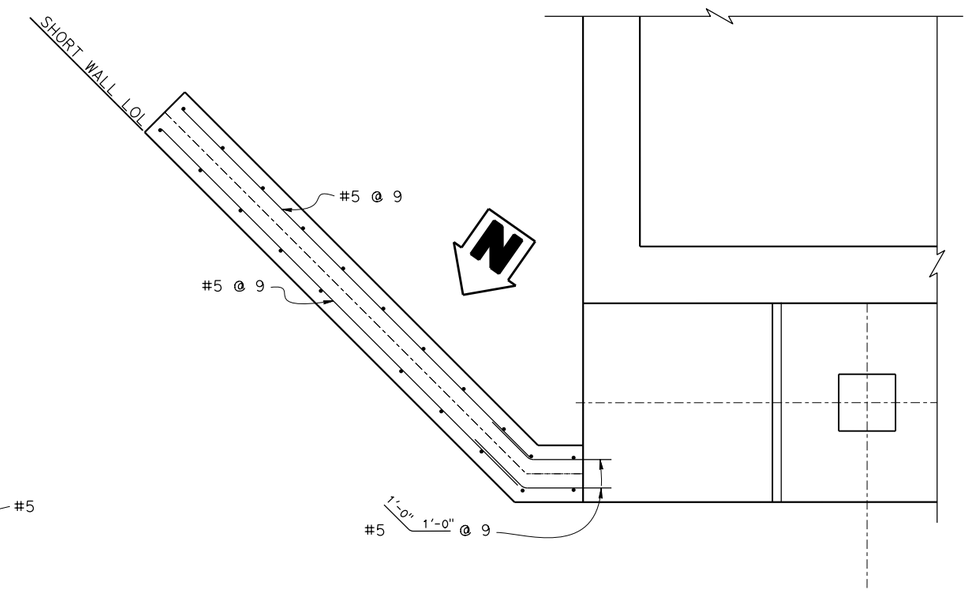

SHORT WALL PLAN
3/4" = 1'-0"

DESIGN	BY Mufeed Khalaf	CHECKED Michael Bergman	
DETAILS	BY Shadi Motalebi	CHECKED Michael Bergman	
QUANTITIES	BY Joey Aquino	CHECKED Justin Woody	

STATE OF CALIFORNIA
DEPARTMENT OF TRANSPORTATION

DIVISION OF ENGINEERING SERVICES
BRIDGE DESIGN
BRANCH 3

BRIDGE No. 36-0126
POST MILE 13.61

SAN LORENZO RIVER Br (REPLACE)
ABUTMENT DETAILS No. 3

STRUCTURES DESIGN DETAIL SHEET
(ENGLISH) (REVISION 3/10/2021)

DATE PLOTTED => 3-DEC-2021 TIME PLOTTED => 15:55
FILE => 36-0126-f-abt03.dgn USERNAME => s136540

ORIGINAL SCALE IN INCHES FOR REDUCED PLANS 0 1 2 3

UNIT: 3578
PROJECT NUMBER & PHASE: 05160000781

COUNTY/ROUTE: Scr/9
CONTRACT No.: 05-1H4704

DISREGARD PRINTS BEARING EARLIER REVISION DATES

REVISION DATES: 8-18-21

SHEET X OF X

DocuSign Envelope ID: EF8475C0-0470-4E52-B5B5-25D92AE11799

Dist	COUNTY	ROUTE	POST MILES TOTAL PROJECT	SHEET No.	TOTAL SHEETS

INCOMPLETE PLAN FOR DESIGN STUDY
PRINTED DATE: 3-DEC-2021
Office of Structure Design
STATE OF CALIFORNIA

REGISTERED CIVIL ENGINEER X DATE

PLANS APPROVAL DATE

REGISTERED PROFESSIONAL ENGINEER Joey M Aquino III No. 58386 Exp. 12-31-22 CIVIL STATE OF CALIFORNIA

THE STATE OF CALIFORNIA OR ITS OFFICERS OR AGENTS SHALL NOT BE RESPONSIBLE FOR THE ACCURACY OR COMPLETENESS OF SCANNED COPIES OF THIS PLAN SHEET.

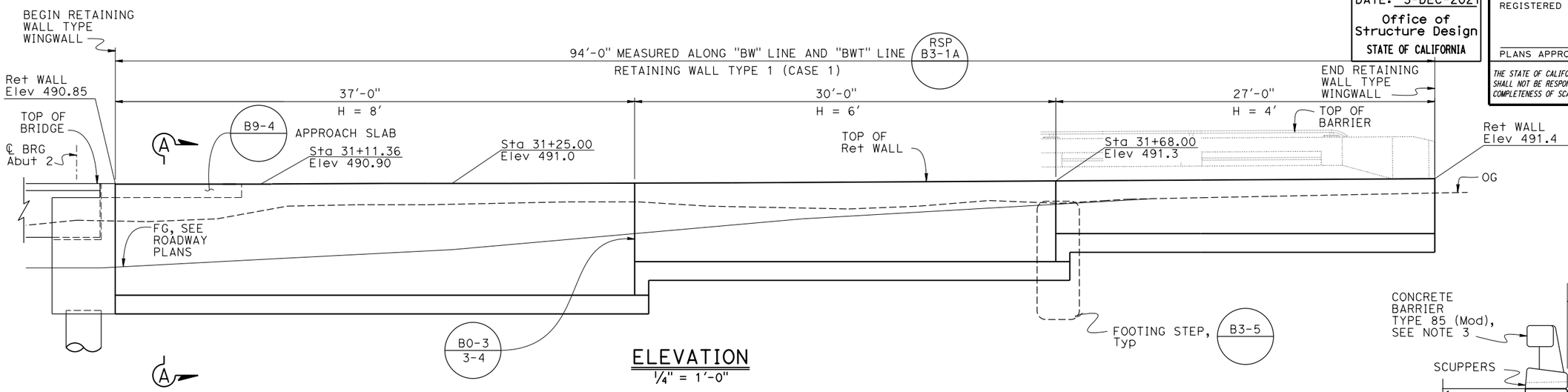

ELEVATION
1/4" = 1'-0"

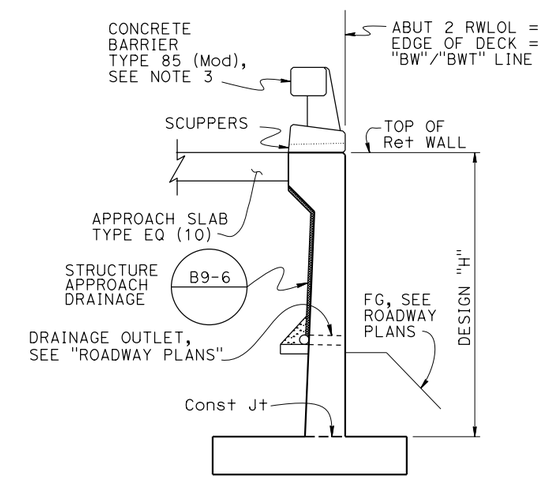

SECTION A-A
3/8" = 1'-0"

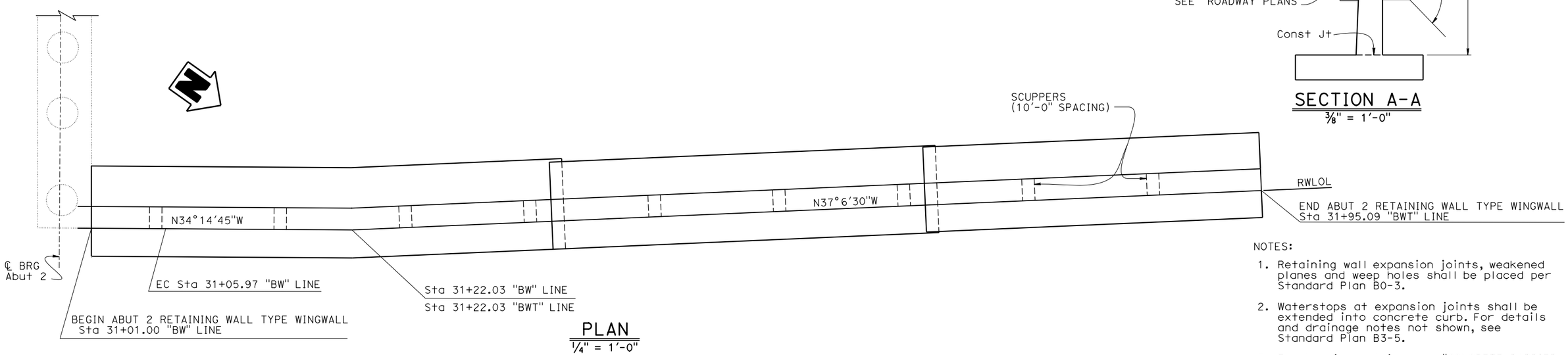

PLAN
1/4" = 1'-0"

NOTES:

1. Retaining wall expansion joints, weakened planes and weep holes shall be placed per Standard Plan B0-3.
2. Waterstops at expansion joints shall be extended into concrete curb. For details and drainage notes not shown, see Standard Plan B3-5.
3. For barrier details, see "CONCRETE BARRIER TYPE 85 DETAILS No. 1 ,2 and 3" sheets
4. For bottom of footing elevation, see "FOUNDATION PLAN" sheet

	BY	CHECKED
DESIGN	Mufeed Khalaf	Michael Bergman
DETAILS	Shadi Motalebi	Michael Bergman
QUANTITIES	Joey Aquino	Justin Woody

STATE OF CALIFORNIA
DEPARTMENT OF TRANSPORTATION

DIVISION OF ENGINEERING SERVICES
BRIDGE DESIGN
BRANCH 3

BRIDGE No. 36-0126
POST MILE 13.61

SAN LORENZO RIVER Br (REPLACE)
RETAINING WALL TYPE WINGWALL LAYOUT

STRUCTURES DESIGN DETAIL SHEET (ENGLISH) (REVISION 3/10/2021)

DATE PLOTTED => 3-DEC-2021 TIME PLOTTED => 15:55
FILE => 36-0126-g-rwdt.dgn USERNAME => s136540
ORIGINAL SCALE IN INCHES FOR REDUCED PLANS 0 1 2 3

UNIT: 3578
PROJECT NUMBER & PHASE: 05160000781
COUNTY/ROUTE: Scr/9
CONTRACT No.: 05-1H4704

DISREGARD PRINTS BEARING EARLIER REVISION DATES

REVISION DATES: 7-21-21 8-28-21

SHEET X OF X

DocuSign Envelope ID: EF8475C0-0470-4E52-B5B5-25D92AE11799

INCOMPLETE PLAN FOR DESIGN STUDY
PRINTED DATE: 3-DEC-2021
Office of Structure Design
STATE OF CALIFORNIA

Dist	COUNTY	ROUTE	POST MILES TOTAL PROJECT	SHEET No.	TOTAL SHEETS

REGISTERED CIVIL ENGINEER X DATE

PLANS APPROVAL DATE

REGISTERED PROFESSIONAL ENGINEER Joey M Aquino III No. 58386 Exp. 12-31-22 CIVIL STATE OF CALIFORNIA

THE STATE OF CALIFORNIA OR ITS OFFICERS OR AGENTS SHALL NOT BE RESPONSIBLE FOR THE ACCURACY OR COMPLETENESS OF SCANNED COPIES OF THIS PLAN SHEET.

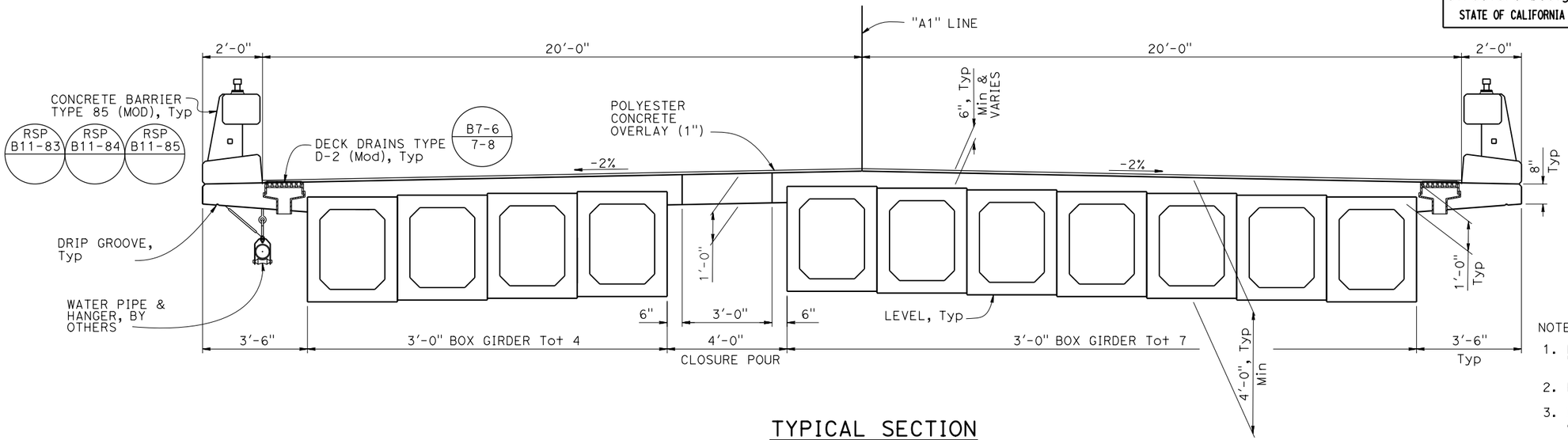

TYPICAL SECTION

½" = 1'-0"

NOTES:

1. For Box Girder reinforcement see "BOX GIRDER DETAILS" sheet
2. PC/PS Box Girder reinforcement not shown
3. Inserts for the pipe hanger will be installed during stage 1

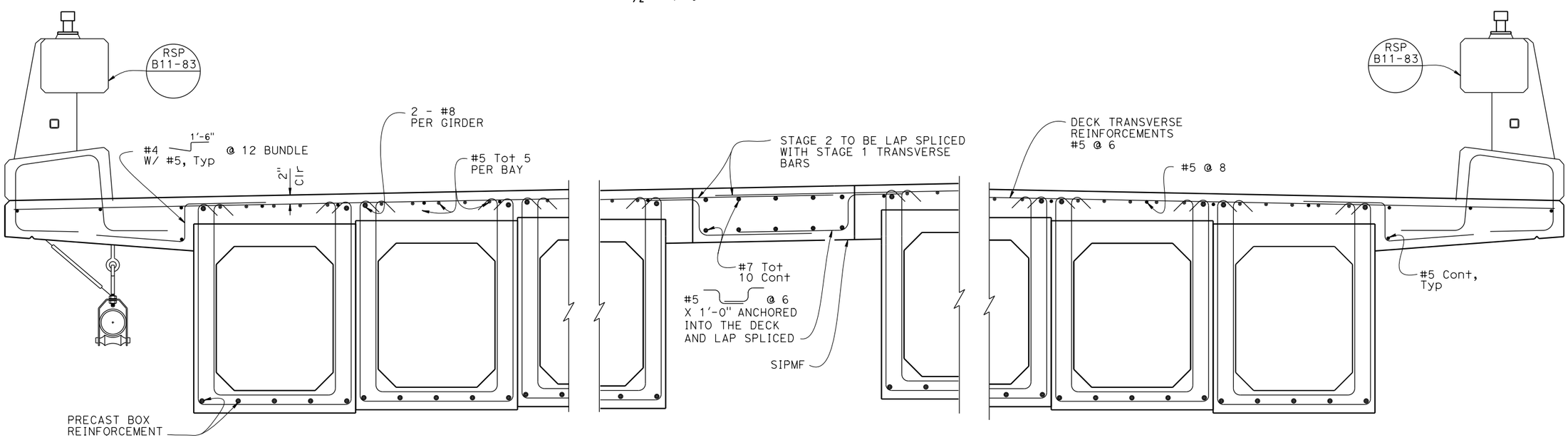

PART TYPICAL SECTION

1" = 1'-0"

	BY	CHECKED
DESIGN	Mufeed Khalaf	Michael Bergman
DETAILS	Shadi Motalebi	Michael Bergman
QUANTITIES	Joey Aquino	Justin Woody

STATE OF CALIFORNIA DEPARTMENT OF TRANSPORTATION

DIVISION OF ENGINEERING SERVICES BRIDGE DESIGN BRANCH 3

BRIDGE No. 36-0126
POST MILE 13.61

SAN LORENZO RIVER Br (REPLACE)

TYPICAL SECTION

STRUCTURES DESIGN DETAIL SHEET (ENGLISH) (REVISION 3/10/2021)

DATE PLOTTED => 3-DEC-2021 TIME PLOTTED => 15:55
FILE => 36-0126-k-ts01.dgn USERNAME => s136540
ORIGINAL SCALE IN INCHES FOR REDUCED PLANS 0 1 2 3

UNIT: 3578
PROJECT NUMBER & PHASE: 05160000781

COUNTY/ROUTE: Scr/9
CONTRACT No.: 05-1H4704

DISREGARD PRINTS BEARING EARLIER REVISION DATES

REVISION DATES: 5-20-21

SHEET X OF X

DocuSign Envelope ID: EF8475C0-0470-4E52-B5B5-25D92AE11799

Dist	COUNTY	ROUTE	POST MILES TOTAL PROJECT	SHEET No.	TOTAL SHEETS

INCOMPLETE PLAN FOR DESIGN STUDY
PRINTED DATE: 3-DEC-2021
Office of Structure Design
STATE OF CALIFORNIA

REGISTERED CIVIL ENGINEER X DATE

PLANS APPROVAL DATE

REGISTERED PROFESSIONAL ENGINEER Joey M Aquino III No. 58386 Exp. 12-31-22 CIVIL STATE OF CALIFORNIA

THE STATE OF CALIFORNIA OR ITS OFFICERS OR AGENTS SHALL NOT BE RESPONSIBLE FOR THE ACCURACY OR COMPLETENESS OF SCANNED COPIES OF THIS PLAN SHEET.

NOTES:

1. For "SECTION A-A" and "SECTION B-B" see "PC/PS BOX GIRDER DETAILS No. 3" sheet
2. For "PRE-TENSIONING NOTES" see, "PC/PS BOX GIRDER DETAILS No. 3" sheet

CONSTRUCTION SEQUENCE FOR SPLICE GIRDER:

1. Place Splice diaphragms
2. Post Tensioning Girders
3. Girders lifted in place

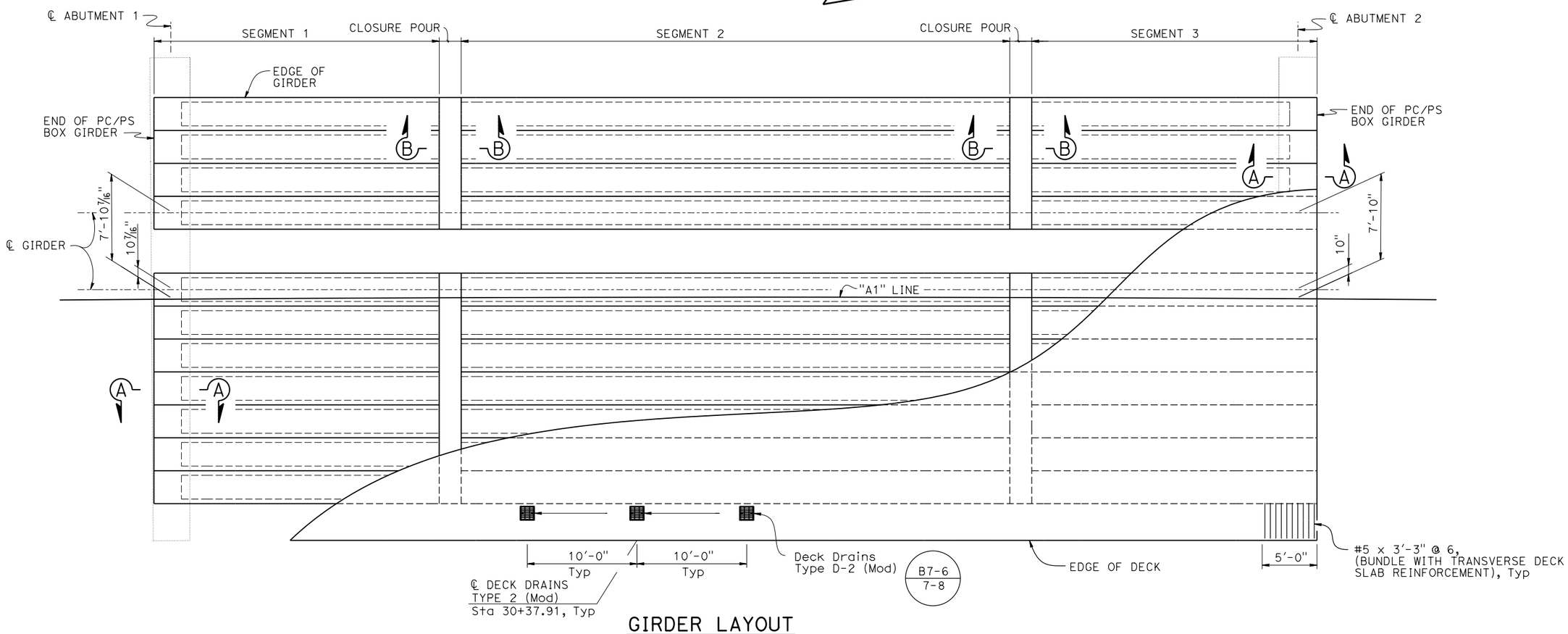

GIRDER LAYOUT

1" = 5'

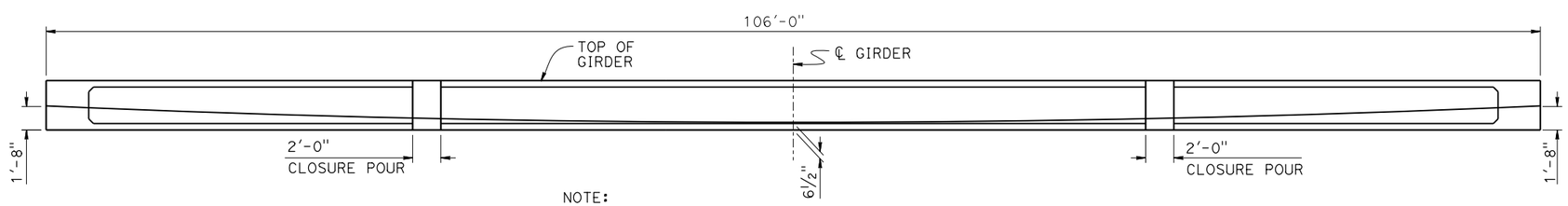

NOTE:

Two cable paths are parabolic between points shown

ELEVATION

1" = 5'

	BY	CHECKED
DESIGN	Mufeed Khalaf	Michael Bergman
DETAILS	Shadi Motalebi	Michael Bergman
QUANTITIES	Joey Aquino	Justin Woody

STATE OF CALIFORNIA
DEPARTMENT OF TRANSPORTATION

DIVISION OF ENGINEERING SERVICES
BRIDGE DESIGN
BRANCH 3

BRIDGE No. 36-0126
POST MILE 13.61

SAN LORENZO RIVER Br (REPLACE)

PC/PS BOX GIRDER LAYOUT

STRUCTURES DESIGN DETAIL SHEET (ENGLISH) (REVISION 3/10/2021)

DATE PLOTTED => 3-DEC-2021 TIME PLOTTED => 15:55
FILE => 36-0126-1-g_lo.dgn USERNAME => s136540
ORIGINAL SCALE IN INCHES FOR REDUCED PLANS 0 1 2 3

UNIT: 3578
PROJECT NUMBER & PHASE: 05160000781

COUNTY/ROUTE: Scr/9
CONTRACT No.: 05-1H4704

DISREGARD PRINTS BEARING EARLIER REVISION DATES

REVISION DATES: 6-29-21

SHEET X OF X

DocuSign Envelope ID: EF8475C0-0470-4E52-B5B5-25D92AE11799

INCOMPLETE PLAN FOR DESIGN STUDY
PRINTED DATE: 3-DEC-2021
Office of Structure Design
STATE OF CALIFORNIA

Dist	COUNTY	ROUTE	POST MILES TOTAL PROJECT	SHEET No.	TOTAL SHEETS

REGISTERED CIVIL ENGINEER X DATE

PLANS APPROVAL DATE

REGISTERED PROFESSIONAL ENGINEER Joey M Aquino III No. 58386 Exp. 12-31-22 CIVIL STATE OF CALIFORNIA

THE STATE OF CALIFORNIA OR ITS OFFICERS OR AGENTS SHALL NOT BE RESPONSIBLE FOR THE ACCURACY OR COMPLETENESS OF SCANNED COPIES OF THIS PLAN SHEET.

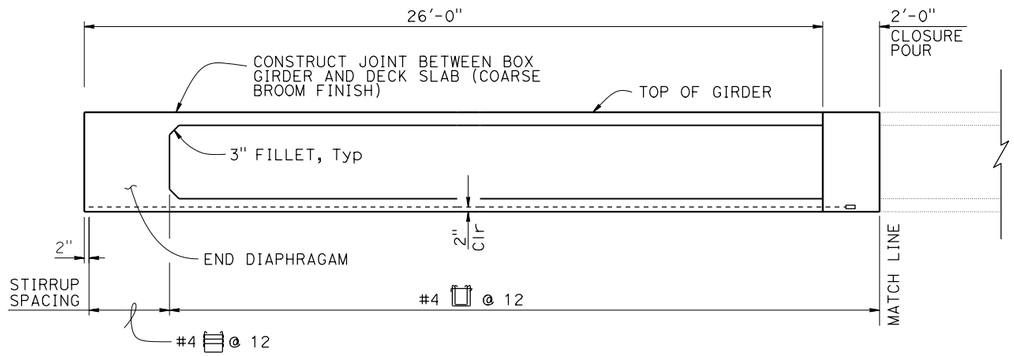

LONGITUDINAL SECTION SEGMENT 1

3/8" = 1'-0"

PRESTRESSING NOTES:

1. JACKING FORCE (P): The jacking force required at the point of control along the span. The jacking force does not include any fabrication specific losses.
2. The maximum tensile stress in the prestressing steel upon release shall not exceed 75% of the specified minimum ultimate tensile strength of the prestressing steel.
3. The maximum temporary tensile stress (jacking stress) in the prestressing steel shall not exceed 80% of the specified minimum ultimate tensile strength of the prestressing steel.
4. CONCRETE STRENGTH: f'ci is at time of initial stressing
   f'c is at 28 days
5. Deflection components are Informational - to be used in setting screed line elevations
6. Screed line elevations for deck concrete will be determined by the Engineer.
7. Prestressing strand shall be 270 ksi low relaxation
8. A_S, Min is the minimum area required of prestressing steel

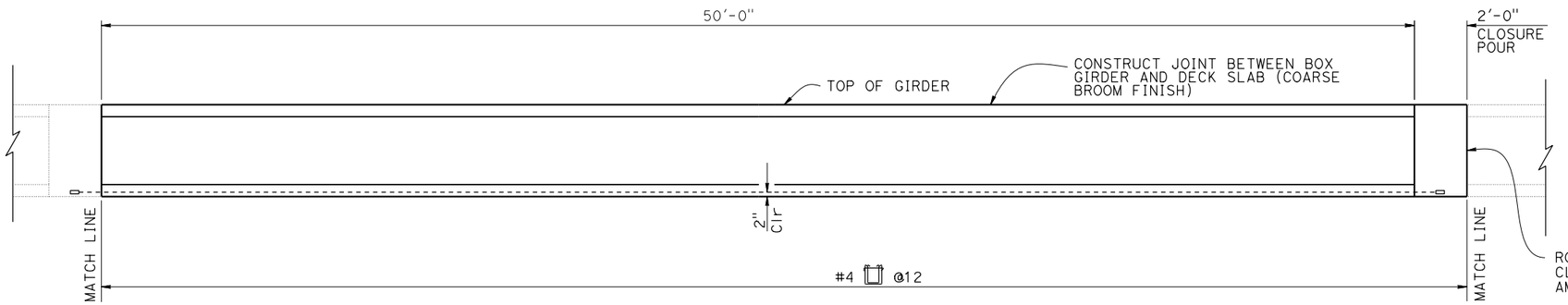

LONGITUDINAL SECTION SEGMENT 2

3/8" = 1'-0"

POST-TENSIONING NOTES

270 ksi Low Relaxation Strands

Total Number of Girders	Pjack (Kips)	A_S Min (in^2)	Splice Concrete Strength (ksi)		Precast Girder Concrete Strength (ksi)		Anchor Set (in)
			f'_{ci}	f'_c	f'_{ci}	f'_c	
11	1230	6.0	5.0	8.0	5.0	8.0	0.37

Pjack = Prestressing Force per Girder.
As min = Minimum area of prestressing steel.
f'ci is at time of stressing.
Approval of Engineer is required for deviation.
The Min distance between centers of individual strands is 1.57" for 0.37" strand, 1.77" for 0.43" strand and 0.51" strand, and 1.97" for 0.59" strand.

Note:
For precast girder f'c see "Post Tensioning Notes" on "PC/PS box GIRDER DETAILS NO.3" sheet.

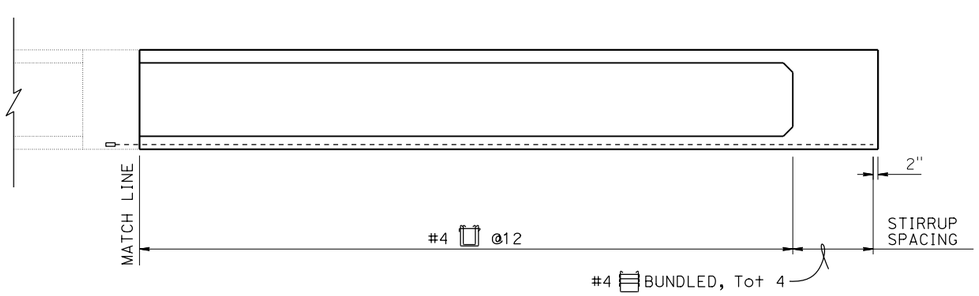

LONGITUDINAL SECTION SEGMENT 3

3/8" = 1'-0"

	BY	CHECKED
DESIGN	Mufeed Khalaf	Michael Bergman
DETAILS	Shadi Motalebi	Michael Bergman
QUANTITIES	Joey Aquino	Justin Woody

STATE OF CALIFORNIA DEPARTMENT OF TRANSPORTATION

DIVISION OF ENGINEERING SERVICES BRIDGE DESIGN BRANCH 3

BRIDGE No. 36-0126
POST MILE 13.61

SAN LORENZO RIVER Br (REPLACE)
PC/PS BOX GIRDER DETAILS No. 1

STRUCTURES DESIGN DETAIL SHEET (ENGLISH) (REVISION 3/10/2021)

DATE PLOTTED => 3-DEC-2021 TIME PLOTTED => 15:55
FILE => 36-0126-1-gdt01.dgn USERNAME => s136540
ORIGINAL SCALE IN INCHES FOR REDUCED PLANS 0 1 2 3

UNIT: 3578
PROJECT NUMBER & PHASE: 05160000781

COUNTY/ROUTE: Scr/9
CONTRACT No.: 05-1H4704

DISREGARD PRINTS BEARING EARLIER REVISION DATES

REVISION DATES: 6-29-21

SHEET X OF X

DocuSign Envelope ID: EF8475C0-0470-4E52-B5B5-25D92AE11799

INCOMPLETE PLAN FOR DESIGN STUDY
PRINTED DATE: 3-DEC-2021
Office of Structure Design
STATE OF CALIFORNIA

Dist	COUNTY	ROUTE	POST MILES TOTAL PROJECT	SHEET No.	TOTAL SHEETS

REGISTERED CIVIL ENGINEER X DATE

PLANS APPROVAL DATE

REGISTERED PROFESSIONAL ENGINEER
Joey M Aquino III
No. 58386
Exp. 12-31-22
CIVIL
STATE OF CALIFORNIA

THE STATE OF CALIFORNIA OR ITS OFFICERS OR AGENTS SHALL NOT BE RESPONSIBLE FOR THE ACCURACY OR COMPLETENESS OF SCANNED COPIES OF THIS PLAN SHEET.

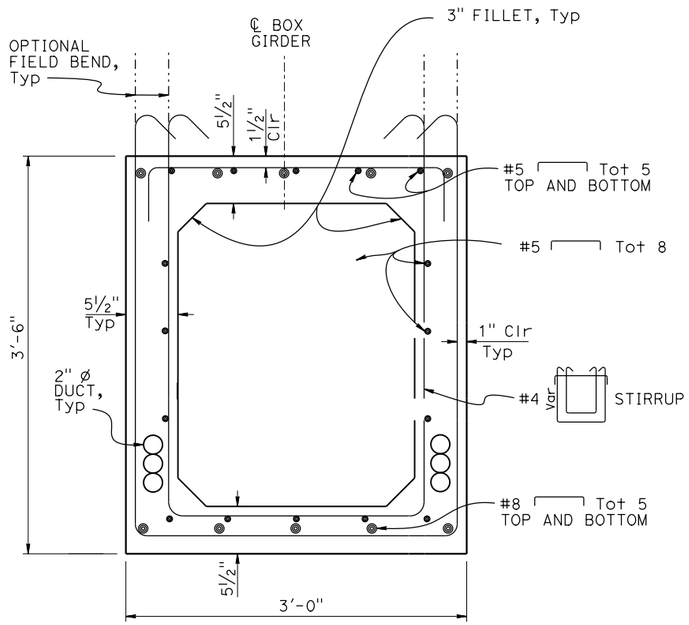

PC/PS BOX GIRDER

1½" = 1'-0"

NOTES:

1. Adjust steel spacing to avoid conflict with P/S strands
2. Adjust tail length of stirrups to match deck cross slope and post tensioning ducts
3. Not all Pre-stressed ducts are shown

	BY	CHECKED
DESIGN	Mufeed Khalaf	Michael Bergman
DETAILS	Shadi Motalebi	Michael Bergman
QUANTITIES	Joey Aquino	Justin Woody

STATE OF CALIFORNIA
DEPARTMENT OF TRANSPORTATION

DIVISION OF ENGINEERING SERVICES
BRIDGE DESIGN
BRANCH 3

BRIDGE No. 36-0126
POST MILE 13.61

SAN LORENZO RIVER Br (REPLACE)
PC/PS BOX GIRDER DETAILS No. 2

STRUCTURES DESIGN DETAIL SHEET (ENGLISH) (REVISION 3/10/2021)

DATE PLOTTED => 3-DEC-2021 TIME PLOTTED => 15:56
FILE => 36-0126-1-gdt02.dgn USERNAME => s136540

ORIGINAL SCALE IN INCHES FOR REDUCED PLANS 0 1 2 3

UNIT: 3578
PROJECT NUMBER & PHASE: 05160000781

COUNTY/ROUTE: Scr/9
CONTRACT No.: 05-1H4704

DISREGARD PRINTS BEARING EARLIER REVISION DATES

REVISION DATES: 6-29-21

SHEET X OF X

DocuSign Envelope ID: EF8475C0-0470-4E52-B5B5-25D92AE11799

NOTES:

1. Adjust steel spacing to avoid conflict with P/S strands
2. Adjust tail length of stirrups to match deck cross slope and post tensioning ducts
3. For location of "SECTION A-A" and "SECTION B-B" see "BOX GIRDER LAYOUT" sheet
4. All reinforcements in splice region to be mechanically spliced

** Roughen surface of keyway and embedded surfaces of BOX GIRDER

INCOMPLETE PLAN FOR DESIGN STUDY
PRINTED DATE: 3-DEC-2021
Office of Structure Design
STATE OF CALIFORNIA

Dist	COUNTY	ROUTE	POST MILES TOTAL PROJECT	SHEET No.	TOTAL SHEETS

REGISTERED CIVIL ENGINEER X DATE

PLANS APPROVAL DATE

REGISTERED PROFESSIONAL ENGINEER Joey M Aquino III No. 58386 Exp. 12-31-22 CIVIL STATE OF CALIFORNIA

THE STATE OF CALIFORNIA OR ITS OFFICERS OR AGENTS SHALL NOT BE RESPONSIBLE FOR THE ACCURACY OR COMPLETENESS OF SCANNED COPIES OF THIS PLAN SHEET.

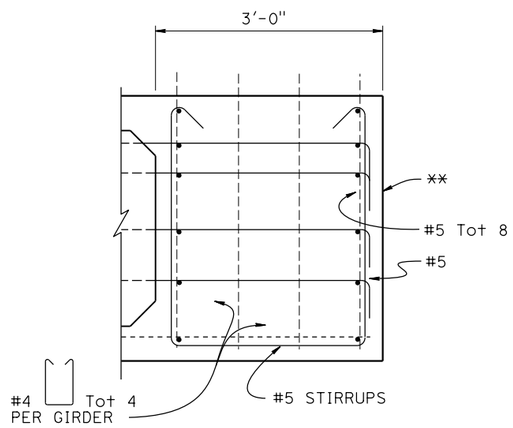

SECTION A-A

END DIAPHRAGM @ ABUTMENT

1" = 1'-0"

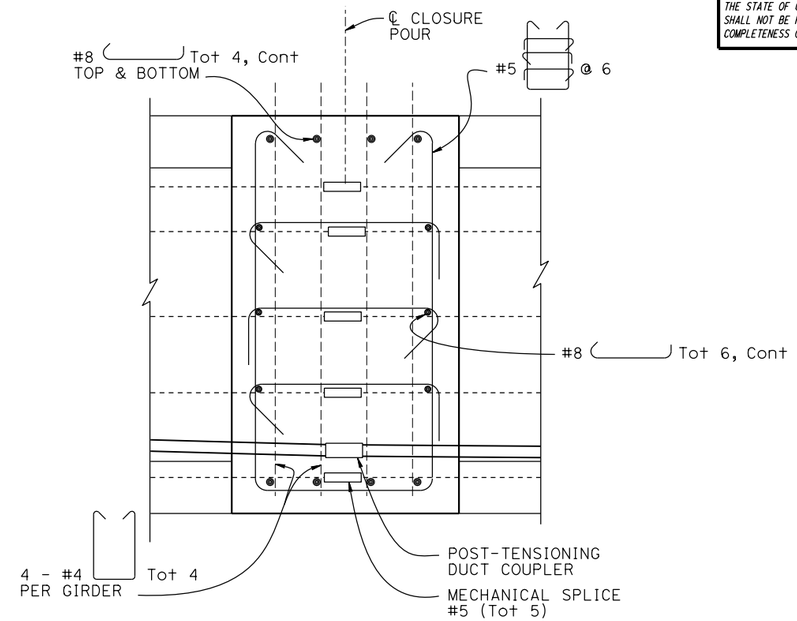

SECTION B-B

CLOSURE POUR

1½" = 1'-0"

PRE-TENSIONING NOTES

Interior & Exterior Girders
270 ksi Low Relaxation Strands

Girder Segment	Total Number of Segment	Pjack (Kips)	A_s Min (in^2)	Concrete Strength (ksi) f'_{ci}
1	11	175K	0.44	5.0
2	11	350K	0.44	5.0
3	11	175K	0.44	5.0

NOTES:

For POST TENSIONING NOTES see, "PC/PS BOX GIRDER DETAILS No. 1" sheet

DEFLECTION COMPONENTS AT MID-SPAN

	Deck DL (in)	Rail DL (in)
Girder	3.4	0.50

Deflection components: Informational - to be used in setting screed line elevations.
Screed line elevations for deck concrete will be determined by the Engineer.

	BY	CHECKED
DESIGN	Mufeed Khalaf	Michael Bergman
DETAILS	Shadi Motalebi	Michael Bergman
QUANTITIES	Joey Aquino	Justin Woody

STATE OF CALIFORNIA
DEPARTMENT OF TRANSPORTATION

DIVISION OF ENGINEERING SERVICES
BRIDGE DESIGN
BRANCH 3

BRIDGE No. 36-0126
POST MILE 13.61

SAN LORENZO RIVER Br (REPLACE)
PC/PS BOX GIRDER DETAILS No. 3

STRUCTURES DESIGN DETAIL SHEET (ENGLISH) (REVISION 3/10/2021)

DATE PLOTTED => 3-DEC-2021 TIME PLOTTED => 15:56
FILE => 36-0126-1-gdt03.dgn USERNAME => s136540

ORIGINAL SCALE IN INCHES FOR REDUCED PLANS 0 1 2 3

UNIT: 3578
PROJECT NUMBER & PHASE: 05160000781

COUNTY/ROUTE: Scr/9
CONTRACT No.: 05-1H4704

DISREGARD PRINTS BEARING EARLIER REVISION DATES

REVISION DATES: 7-29-21

SHEET X OF X

DocuSign Envelope ID: EF8475C0-0470-4E52-B5B5-25D92AE11799

Dist	COUNTY	ROUTE	POST MILES TOTAL PROJECT	SHEET No.	TOTAL SHEETS

INCOMPLETE PLAN FOR DESIGN STUDY
PRINTED DATE: 3-DEC-2021
Office of Structure Design
STATE OF CALIFORNIA

REGISTERED CIVIL ENGINEER X DATE

PLANS APPROVAL DATE

REGISTERED PROFESSIONAL ENGINEER Joey M Aquino III No. 58386 Exp. 12-31-22 CIVIL STATE OF CALIFORNIA

THE STATE OF CALIFORNIA OR ITS OFFICERS OR AGENTS SHALL NOT BE RESPONSIBLE FOR THE ACCURACY OR COMPLETENESS OF SCANNED COPIES OF THIS PLAN SHEET.

NOTES:

1. All existing 1935 Abutments will be removed to Elevation 480.6
   Later Widening will be removed entirely

2. For "SECTION A-A", "SECTION B-B", "SECTION C-C" "SECTION D-D", "SECTION E-E" and "SECTION F-F", see "BRIDGE REMOVAL DETAILS No. 2"

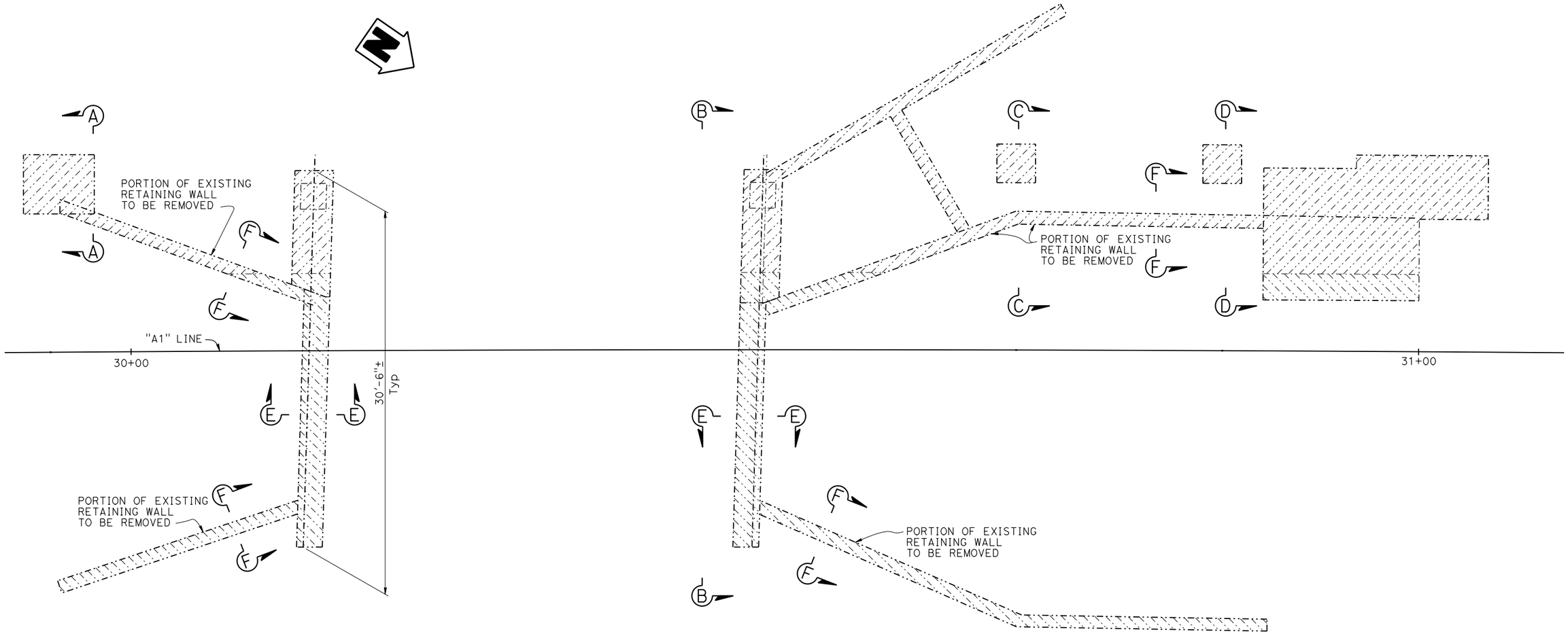

PLAN
1/4" = 1'-0"

LEGEND:

Existing Structure

Limits of stage 1 Bridge Removal and Bridge Removal (Portion)

Limits of stage 2 Bridge Removal and Bridge Removal (Portion)

NOTE:
THE CONTRACTOR SHALL VERIFY ALL CONTROLLING FIELD DIMENSIONS BEFORE ORDERING OR FABRICATING ANY MATERIAL.

	BY	CHECKED
DESIGN	Mufeed Khalaf	Michael Bergman
DETAILS	Shadi Motalebi	Michael Bergman
QUANTITIES	Joey Aquino	Justin Woody

STATE OF CALIFORNIA
DEPARTMENT OF TRANSPORTATION

DIVISION OF ENGINEERING SERVICES
BRIDGE DESIGN
BRANCH 3

BRIDGE No. 36-0126
POST MILE 13.61

SAN LORENZO RIVER Br (REPLACE)
BRIDGE REMOVAL DETAILS No. 1

STRUCTURES DESIGN DETAIL SHEET (ENGLISH) (REVISION 3/10/2021)

DATE PLOTTED => 3-DEC-2021 TIME PLOTTED => 15:56
FILE => 36-0126-o-remdt01.dgn USERNAME => s136540

ORIGINAL SCALE IN INCHES FOR REDUCED PLANS 0 1 2 3

UNIT: 3578
PROJECT NUMBER & PHASE: 05160000781

COUNTY/ROUTE: Scr/9
CONTRACT No.: 05-1H4704

DISREGARD PRINTS BEARING EARLIER REVISION DATES

REVISION DATES: 6-7-21

SHEET X OF X

DocuSign Envelope ID: EF8475C0-0470-4E52-B5B5-25D92AE11799

Dist	COUNTY	ROUTE	POST MILES TOTAL PROJECT	SHEET No.	TOTAL SHEETS

INCOMPLETE PLAN FOR DESIGN STUDY
PRINTED DATE: 3-DEC-2021
Office of Structure Design
STATE OF CALIFORNIA

REGISTERED CIVIL ENGINEER X DATE

PLANS APPROVAL DATE

REGISTERED PROFESSIONAL ENGINEER Joey M Aquino III No. 58386 Exp. 12-31-22 CIVIL STATE OF CALIFORNIA

THE STATE OF CALIFORNIA OR ITS OFFICERS OR AGENTS SHALL NOT BE RESPONSIBLE FOR THE ACCURACY OR COMPLETENESS OF SCANNED COPIES OF THIS PLAN SHEET.

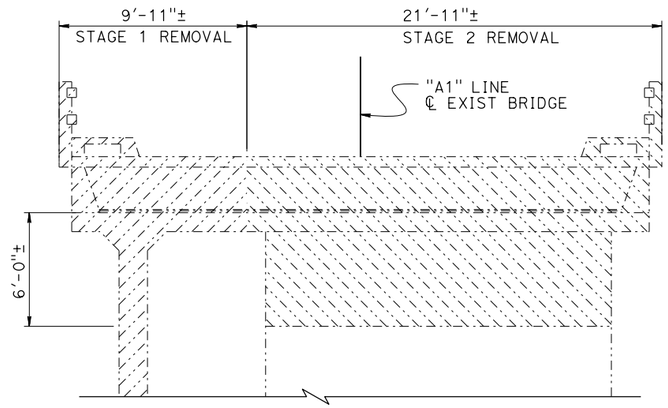

SECTION B-B
1/4" = 1'-0"

LEGEND:

-·-·-·- Existing Structure

Limits of stage 1 Bridge Removal

Limits of stage 2 Bridge Removal

NOTE:

Entire superstructure will be removed

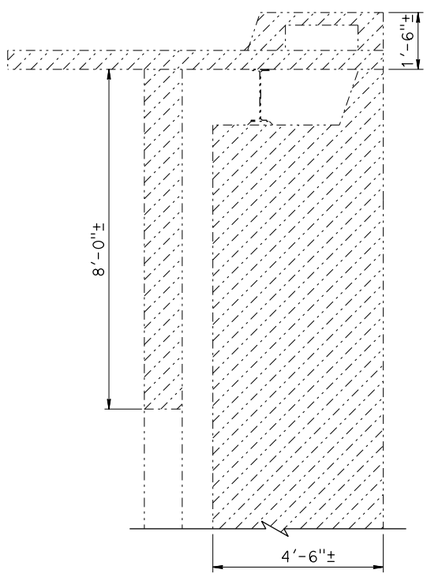

SECTION A-A
1/2" = 1'-0"

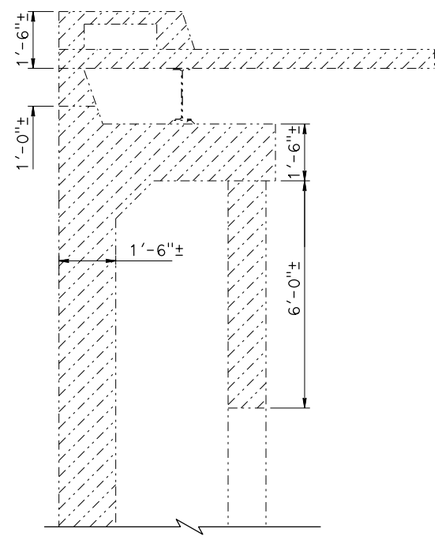

SECTION C-C
1/2" = 1'-0"

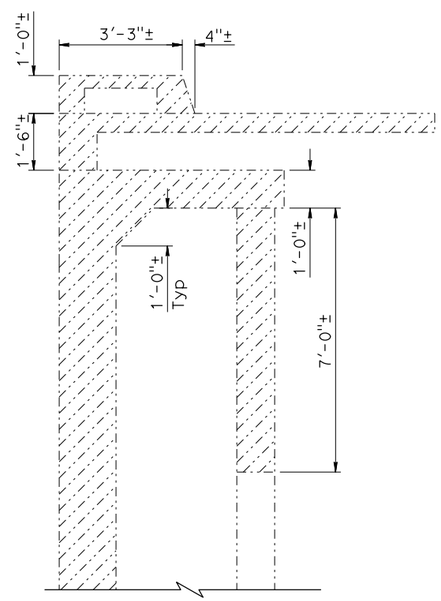

SECTION D-D
1/2" = 1'-0"

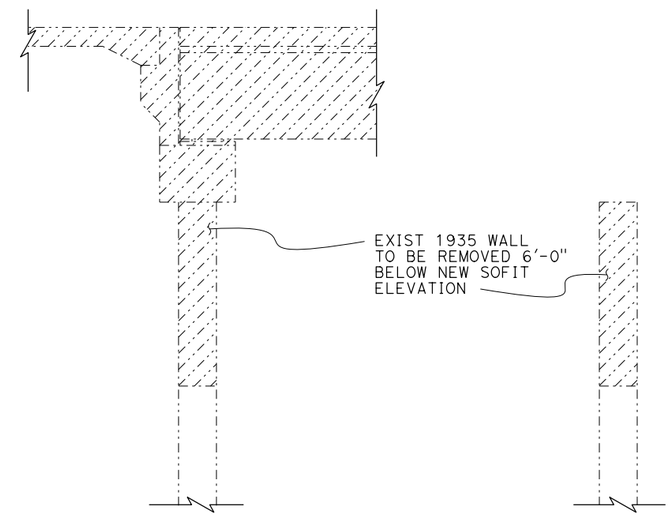

SECTION E-E
1/2" = 1'-0"

SECTION F-F
1/2" = 1'-0"

	BY	CHECKED
DESIGN	Mufeed Khalaf	Michael Bergman
DETAILS	Shadi Motalebi	Michael Bergman
QUANTITIES	Joey Aquino	Justin Woody

STATE OF CALIFORNIA
DEPARTMENT OF TRANSPORTATION

DIVISION OF ENGINEERING SERVICES
BRIDGE DESIGN
BRANCH 3

BRIDGE No. 36-0126
POST MILE 13.61

SAN LORENZO RIVER Br (REPLACE)
BRIDGE REMOVAL DETAILS No. 2

STRUCTURES DESIGN DETAIL SHEET
(ENGLISH) (REVISION 3/10/2021)

DATE PLOTTED => 3-DEC-2021 TIME PLOTTED => 15:56
FILE => 36-0126-o-remdt02.dgn USERNAME => s136540

ORIGINAL SCALE IN INCHES FOR REDUCED PLANS 0 1 2 3

UNIT: 3578
PROJECT NUMBER & PHASE: 05160000781

COUNTY/ROUTE: Scr/9
CONTRACT No.: 05-1H4704

DISREGARD PRINTS BEARING EARLIER REVISION DATES

REVISION DATES: 6-7-21

SHEET X OF X

DocuSign Envelope ID: EF8475C0-0470-4E52-B5B5-25D92AE11799

INCOMPLETE PLAN FOR DESIGN STUDY
PRINTED DATE: 3-DEC-2021
Office of Structure Design
STATE OF CALIFORNIA

Dist	COUNTY	ROUTE	POST MILES TOTAL PROJECT	SHEET No.	TOTAL SHEETS

REGISTERED CIVIL ENGINEER X DATE

PLANS APPROVAL DATE

REGISTERED PROFESSIONAL ENGINEER
Joey M Aquino III
No. 58386
Exp. 12-31-22
CIVIL
STATE OF CALIFORNIA

THE STATE OF CALIFORNIA OR ITS OFFICERS OR AGENTS SHALL NOT BE RESPONSIBLE FOR THE ACCURACY OR COMPLETENESS OF SCANNED COPIES OF THIS PLAN SHEET.

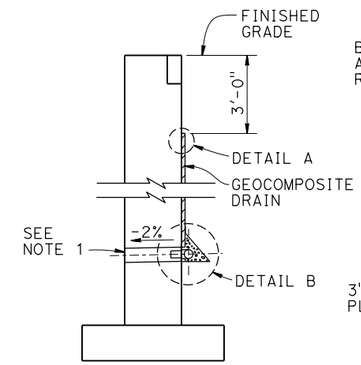

WALL SECTION

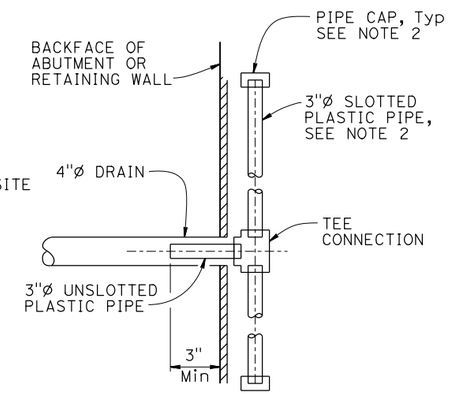

SECTION A-A

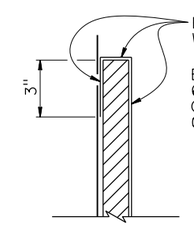

DETAIL A

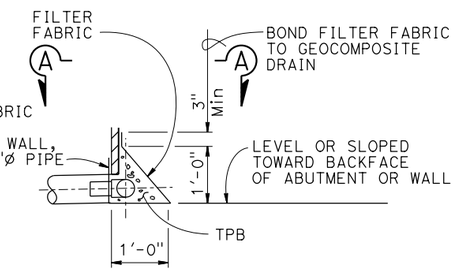

DETAIL B

NOTES:

1. 4"ø drains at intermediate sag points and 25' maximum center to center (9'-0" C-C for Type 3 and 9'-3" C-C for Type 4 retaining walls). For walls adjacent to sidewalks or curbs, provide 4"ø plastic pipe under the sidewalk to discharge through curb face. Exposed wall drains shall be located 3"± above finished grade.
2. Geocomposite drain, treated permeable base material and 3"ø slotted plastic pipe continuous behind retaining wall or abutment. Cap ends of pipe. Provide "Tee" connection at each 4"ø drain.
3. Connect the low end of plastic pipe to the main outlet pipe as applicable.

ALTERNATIVE TO BRIDGE DETAIL B0-3 / 3-1

WEEP HOLE AND GEOCOMPOSITE DRAIN DETAIL

NO SCALE

	BY	CHECKED
DESIGN	Mufeed Khalaf	Michael Bergman
DETAILS	Shadi Motalebi	Michael Bergman
QUANTITIES	Joey Aquino	Justin Woody

STATE OF CALIFORNIA
DEPARTMENT OF TRANSPORTATION

DIVISION OF ENGINEERING SERVICES
BRIDGE DESIGN
BRANCH 3

BRIDGE No. 36-0126
POST MILE 13.61

SAN LORENZO RIVER Br (REPLACE)
STRUCTURE APPROACH DRAINAGE DETAILS

STRUCTURES DESIGN DETAIL SHEET (ENGLISH) (REVISION 3/10/2021)

DATE PLOTTED => 3-DEC-2021 TIME PLOTTED => 15:56
FILE => 36-0126-s-sadd.dgn USERNAME => s136540

ORIGINAL SCALE IN INCHES FOR REDUCED PLANS 0 1 2 3

UNIT: 3578
PROJECT NUMBER & PHASE: 05160000781

COUNTY/ROUTE: Scr/9
CONTRACT No.: 05-1H4704

DISREGARD PRINTS BEARING EARLIER REVISION DATES

REVISION DATES: 7-1-21

SHEET X OF X

DocuSign Envelope ID: EF8475C0-0470-4E52-B5B5-25D92AE11799

Attachment 1

CALIFORNIA DEPARTMENT OF FISH AND WILDLIFE
MITIGATION MONITORING AND REPORTING PROGRAM (MMRP)
CALIFORNIA ENDANGERED SPECIES ACT
INCIDENTAL TAKE PERMIT NO. 2081-2022-011-03

PERMITTEE: **California Department of Transportation**

PROJECT: **State Route – 9 San Lorenzo River Bridge Replacement Project – 1 (EA 05-1H470)**

PURPOSE OF THE MMRP

The purpose of this MMRP is to ensure that the impact minimization and mitigation measures required by the California Department of Fish and Wildlife (CDFW) for the above-referenced Project are properly implemented, and thereby to ensure compliance with section 2081(b) of the Fish and Game Code and section 21081.6 of the Public Resources Code. A table summarizing the mitigation measures required by CDFW is attached. This table is a tool for use in monitoring and reporting on implementation of mitigation measures, but the descriptions in the table do not supersede the mitigation measures set forth in the California Incidental Take Permit (ITP) and in attachments to this ITP, and the omission of a permit requirement from the attached table does not relieve the Permittee of the obligation to ensure the requirement is performed.

OBLIGATIONS OF PERMITTEE

Mitigation measures must be implemented within the time periods indicated in the table that appears below. Permittee has the primary responsibility for monitoring compliance with all mitigation measures and for reporting to CDFW on the progress in implementing those measures. These monitoring and reporting requirements are set forth in this ITP itself and are summarized at the front of the attached table.

VERIFICATION OF COMPLIANCE, EFFECTIVENESS

CDFW may, at its sole discretion, verify compliance with any mitigation measure or independently assess the effectiveness of any mitigation measure.

TABLE OF MITIGATION MEASURES

The following items are identified for each mitigation measure: Mitigation Measure, Source, Implementation Schedule, Responsible Party, and Status/Date/Initials. The Mitigation Measure column summarizes the mitigation requirements of this ITP. The Source column identifies the ITP condition that sets forth the mitigation measure. The Implementation Schedule column shows the date or phase when each mitigation measure will be implemented. The Responsible Party column identifies the person or agency that is primarily responsible for implementing the mitigation measure. The Status/Date/Initials column shall be completed by the Permittee during preparation of each Status Report and the Final Mitigation Report, and must identify the implementation status of each mitigation measure, the date that status was determined, and the initials of the person determining the status.

	Mitigation Measure	Source	Implementation Schedule	Responsible Party	Status / Date / Initials
	BEFORE DISTURBING SOIL OR VEGETATION				
1	Designated Representative. Before starting Covered Activities, Permittee shall designate a representative (Designated Representative) responsible for communications with CDFW and overseeing compliance with this ITP. Permittee shall notify CDFW in writing before starting Covered Activities of the Designated Representative's name, business address, and contact information, and shall notify CDFW in writing if a substitute Designated Representative is selected or identified at any time during the term of this ITP.	ITP Condition # 6.1	Before commencing ground- or vegetation-disturbing activities/ Entire Project	Permittee	
2	Designated Biologist(s), Biological Monitor(s). Permittee shall submit to CDFW in writing the name, qualifications, business address, and contact information of the Designated Biologist(s) and Biological Monitor(s) using the Biologist Resume Form (Attachment 2) or another format containing the same information at least 30 days before starting Covered Activities. Permittee shall ensure that the Designated Biologist(s) and Biological Monitor(s) are knowledgeable and experienced in the biology, natural history, collecting and handling of the Covered Species. The Designated Biologist(s) and Biological Monitor(s) shall be responsible for monitoring Covered Activities to help minimize and fully mitigate or avoid the incidental take of individual Covered Species and to minimize disturbance of Covered Species' habitat. Permittee shall obtain CDFW approval of the Designated Biologist(s) and Biological Monitor(s) in writing before starting Covered Activities and shall also obtain approval in advance, in writing, if the Designated Biologist(s) or Biological Monitor(s) must be changed.	ITP Condition # 6.2	Before commencing ground- or vegetation-disturbing activities/ Entire Project	Permittee	
3	Designated Biologist Authority. To ensure compliance with the Conditions of Approval of this ITP, the Designated Biologist shall immediately stop any activity that does not comply with this ITP and/or order any reasonable measure to avoid the unauthorized take of an individual of the Covered Species. Permittee shall provide unfettered access to the Project Site and otherwise facilitate the Designated Biologist in the performance of his/her duties. If the Designated Biologist is unable to comply with this ITP, then the Designated Biologist shall notify the CDFW Representative immediately. Permittee shall not enter into any agreement or contract of any kind, including but not limited to non-disclosure agreements and confidentiality agreements, with its contractors and/or the Designated Biologist that prohibit or impede open communication with CDFW, including but not limited to providing CDFW staff with the results of any surveys, reports, or studies or notifying CDFW of any non-compliance or take. Failure to notify CDFW of any non-compliance or take or injury of a Covered Species as a result of such agreement or contract may result in CDFW taking actions to prevent or remedy a violation of this ITP.	ITP Condition # 6.3	Before commencing ground- or vegetation-disturbing activities/ Entire Project	Permittee	
4	Education Program. Permittee shall conduct an education program for all persons employed or otherwise working in the Project Area before performing any work. The program shall consist of a presentation from the Designated Biologist that includes a discussion of the biology and general behavior of the Covered Species, information about the distribution and habitat needs of the Covered Species, sensitivity of the Covered Species to human activities, its status pursuant to CESA including legal protection, recovery efforts, penalties for violations and Project-specific protective measures described in this ITP. Permittee shall prepare and distribute wallet-sized cards or a fact sheet handout containing this information for workers to carry in the Project Area. Permittee shall provide interpretation for non-English speaking workers, and the same instruction shall be provided to any new workers before they are	ITP Condition # 6.4	Before commencing ground- or vegetation-disturbing activities/ Entire Project	Permittee	

	authorized to perform work in the Project Area. Upon completion of the program, employees shall sign a form stating they attended the program and understand all protection measures. This training shall be repeated at least once annually for long-term and/or permanent employees that will be conducting work in the Project Area.				
5	Trash Abatement. Permittee shall initiate a trash abatement program before starting Covered Activities and shall continue the program for the duration of the Project. Permittee shall ensure that trash and food items are contained in animal-proof containers and removed, ideally at daily intervals but at least once a week, to avoid attracting opportunistic predators such as ravens, coyotes, and feral dogs.	ITP Condition # 6.6	Before commencing ground- or vegetation-disturbing activities/ Entire Project	Permittee	
6	Delineation of Property Boundaries. Before starting Covered Activities along each part of the route in active construction Permittee shall clearly delineate the boundaries of the Project Area with fencing, stakes, or flags. Permittee shall restrict all Covered Activities to within the fenced, staked, or flagged areas. Permittee shall maintain all fencing, stakes, and flags until the completion of Covered Activities in that area.	ITP Condition # 6.9	Before commencing ground- or vegetation-disturbing activities/ Entire Project	Permittee	
7	Delineation of Habitat. Permittee shall clearly delineate habitat of the Covered Species within the Project Area with posted signs, posting stakes, flags, and/or rope or cord, and place fencing as necessary to minimize the disturbance of Covered Species' habitat.	ITP Condition # 6.10	Before commencing ground- or vegetation-disturbing activities/ Entire Project	Permittee	
8	Notification Before Commencement. The Designated Representative shall notify CDFW 14 calendar days before starting Covered Activities and shall document compliance with all pre-Project Conditions of Approval before starting Covered Activities.	ITP Condition # 7.1	Before commencing ground- or vegetation-disturbing activities	Permittee	
9	Temporary Work Platform and Debris Catchment System Streambed Protection Plan. A minimum of 30 days prior to the initiation of construction the Permittee shall provide a Temporary Work Platform and Debris Catchment System Streambed Protection Plan. The plan shall provide design plans of any temporary work platforms or debris catchment systems. The plan shall also describe how the Permittee will prevent excessive dust, debris and material from entering Covered Species habitat. This may include overlay of visqueen, installation of additional catch-basin systems or utilization of a timber work platform with visqueen underlay during demolition, removal and subsequent construction.	ITP Condition # 8.3	Before commencing ground- or vegetation-disturbing activities	Permittee	
10	Pre-Construction Covered Species Check. Forty-Eight (48) hours prior to the start of construction, the Designated Biologist shall inspect the Project Area for any Covered Species or aquatic species. Aquatic species shall be removed by the Designated Biologist and translocated to a safe location as specified in Condition of Approval 8.7.	ITP Condition # 8.4	Before commencing ground- or vegetation-disturbing activities	Permittee	
11	Dewatering and Diversion. A minimum of 30 days prior to the initiation of construction the Permittee shall submit for CDFW review and acceptance in writing (via e-mail) a creek diversion/dewatering system. The creek diversion shall be removed each season by October 15 as specified in Condition of Approval 8.1. The Permittee shall implement the following during dewatering and water diversion: a) Cofferdams shall be constructed of a non-erodible material which does not contain soil or fine sediment. Sheet piles, gravel-filled bags and/or k-rails shall be used to construct a dam to isolate the stream from its existing channel and re-direct flows out of the excavation area. Bags for gravel bags will be made of burlap or woven synthetic material. The bags will be of sufficient size and strength to hold a minimum of 1.0-cubic-foot of clean gravel, when they are filled to 50 percent of their full capacity. The durability of the burlap will be rated as 10-ounce burlap. The	ITP Condition # 8.6	Before commencing ground- or vegetation-disturbing activities	Permittee	

	ties and burlap will be made of natural materials. The gravel-filled revetment will be wrapped in plastic to further seal the flow and prevent entrapment of Covered Species. b) Cofferdams and the stream diversion system shall remain in place and functional throughout the seasonal work window construction period. If the cofferdams or stream diversion fail, Permittee shall repair them immediately. c) When the cofferdam or other artificial obstruction is being constructed, maintained, or placed in operation, sufficient water shall be allowed to pass downstream of the excavation to maintain aquatic life below the dam. Flow shall be of sufficient quality, quantity and temperature to support fish and other aquatic species both above and below the diversion. The cofferdam materials shall be constructed of non-polluting materials. d) To minimize the potential for Covered Species to be entrained during de-watering activities, Permittee shall establish a Covered Species exclusion barrier and shall place the pump intakes away from complex vegetated banks that may contain habitat for Covered Species. Pump intakes shall be placed away from complex vegetated banks that may contain habitat for Covered Species. Screen material may be constructed of any rigid woven, perforated, or slotted material that provides water passage while physically excluding fish. Round openings in the screen shall not exceed 3/32-inch diameter, square openings shall not exceed 3/32-inch measured diagonally, and slotted openings shall not exceed 0.069 inches in width. Approach velocity shall not exceed 0.33 feet per second. e) Permittee shall select and install site exclusion methods to ensure that Covered Species cannot reenter the Project Area or become impinged on exclusion net or screen. The Designated Biologist shall regularly monitor site exclusion. f) The Designated Biologist shall monitor dewatering at all times. The Designated Biologist shall reduce the rate of diversion as needed to avoid impacts to Covered Species. The Designated Biologist shall monitor upstream and downstream reaches to ensure no Covered Species are stranded or in distress during reduction of flows. g) During excavation, Permittee shall install and maintain check-dams or equivalent sediment control methods as necessary to trap and control sediment-laden water. Permittee shall remove any turbid water and sediment present in the work area prior to restoring water flow through the project site and place them in a location where they cannot enter waters of the state. h) Reintroduction of stream flows shall be gradual to the isolated work area to prevent stranding, channel instability, or excessive scour. The Designated Biologist shall monitor upstream and downstream reaches to ensure no Covered Species are stranded or in distress during reintroduction of flows. If conditions causing or contributing to stress and/or injury are observed, Permittee shall take immediate remedial actions directed at lessening sources of stress. This may include a more gradual reintroduction of flows to avoid abrupt water surface elevation changes both downstream and upstream of the Project Area. i) In the event that work must be phased, Permittee shall remove all cofferdam material prior to the onset of high flows.				
12	Covered Species Rescue Plan. The Permittee shall implement a Covered Species Rescue Plan to be implemented during Project exclusion and stream diversion operations for all species covered under this ITP. The Covered Species Rescue Plan shall include at minimum the following:	ITP Condition # 8.7	Before commencing ground- or vegetation-disturbing activities	Permittee	

	a) Covered Species capture and relocation shall be conducted by or under the direct supervision of the CDFW-approved Designated Biologist, as required by Condition of Approval 6.2. b) Prior to the installation of cofferdams and subsequent Covered Activities, the Designated Biologist shall capture and relocate Covered Species to the nearest predetermined release location, approved in advance by CDFW. c) Before capture and relocation of Covered Species, the Designated Biologist shall identify the most appropriate release location(s). Permittee shall submit the proposed release locations to CDFW for review and acceptance prior to commencement of Covered Activities. Release locations shall provide suitable habitat for Covered Species and shall be selected to minimize the likelihood of Covered Species reentering the work area. d) All dip nets used to capture Covered Species shall be made of a soft braded nylon material that is non-abrasive. Mesh sizing shall be matched to species and the life stages likely encountered. e) Relocation activities shall be performed in the morning if maximum daytime air temperatures are expected to exceed 23 °C (~75 °F). f) Electroshocking shall be conducted using the National Marine Fisheries Service Guidelines for Electrofishing Waters Containing Salmonids Listed Under the Endangered Species Act, June 2000. http://www.westcoast.fisheries.noaa.gov /publications/reference_documents/esa_refs/section4d/electro2000.pdf. g) Captured Covered Species must be kept in a closable container in an adequate amount of cool, clean, well-oxygenated water (e.g., a cooler with lid containing stream water and a battery-operated air stone). Water temperature shall be monitored and kept below 60oF. If necessary, water shall be cooled with ice without introducing ice-borne chemical contaminants. Transport containers shall have a water volume of no less than 5 gallons, preferably more. Covered Species density in the transport container shall not exceed 10 Covered Species (40-80mm) per gallon of water. Collected Covered Species shall not be anesthetized at any point during the rescue operation. h) No employee or contractor shall remove any Covered Species, dead or alive, from the site for personal use. All efforts to reduce the time that live Covered Species are out of the water shall be made to reduce the chances of incidental take during the capture and relocation. All Covered Species are to be promptly returned to the water with the exception of mortality. i) Efforts shall be made to reduce capture and handling stress, minimize the time that Covered Species are held in buckets, and minimize handling stress during processing and release. Covered Species shall not be held in containers with other species. Covered Species shall be processed first and relocated as soon as possible. Species name and length data shall be recorded on data sheets, as well as time, date, location, gear type, water temperature, and any other pertinent observations of the Covered Species. Permittee shall provide Covered Species capture data to CDFW in the Monthly Compliance Report, as required by Condition of Approval 7.5. j) Permittee shall preserve dead individuals by freezing or placing in a sealed container with 10 percent formalin solution. Information on time and exact location of any incidental take, method of take, length of time from death to preservation, water temperature, and any other				

	relevant information will be recorded in writing. Permittee shall contact the CDFW regional representative for instructions on transmitting preserved individuals. Any take of non-Covered Species shall be documented and included in the Monthly and Final Mitigation Reports, as required by Condition of Approval 7.5 and 7.7. k) After the Covered Species relocation effort is completed, if additional Covered Species are observed, Permittee shall cease Covered Activities until those individuals have been relocated. The Designated Biologist shall remain at the site during Covered Activities to capture and relocate additional Covered Species as necessary. l) After completing the rescue, the Designated Biologist shall prepare a brief documentation report. The report shall include information on the personnel conducting the rescue, methods used, numbers of each species collected and relocated, length data, and estimate of the survival immediately after release. Photographs of the site and rescue operations shall be included. The report shall be provided by the Permittee to CDFW in the next Monthly Compliance Report required by Condition 7.4 and 7.5 and in the Annual and Final Mitigation Reports, Condition of Approval 7.5 and 7.7.				
13	Concrete Curing. All concrete used shall be excluded from the wetted channel or areas where it may come into contact with water for a period of 30 days after it is poured/sprayed. Commercial sealants may be applied to the poured concrete surface where difficulty in excluding flow for a long period may occur. If sealant is used the proponent shall follow the instructions as noted on the product label. All sealants shall be approved in advance, in writing by CDFW prior to their use on-site. As an alternative, water quality testing and analysis may be conducted in coordination with CDFW. Results shall be submitted and accepted by CDFW prior to removal of the temporary diversion system that will re-introduce flows to new concrete.	ITP Condition # 8.10	Before commencing ground- or vegetation-disturbing activities/ Entire Project	Permittee	
14	Decontamination of Clothing and Equipment. Any equipment that will enter the channel during construction will be decontaminated before and after construction to prevent the spread of aquatic diseases, such as ranavirus, and invasive aquatic species. Workers that will enter the riparian area, bed, bank or channel must also decontaminate waders, boots and other clothing that will come in direct contact with the water. Decontamination of clothing and equipment will be done through by selecting one of the following: a) Drying equipment without washing, in an upland location following last aquatic use. If average daytime temperatures exceed 80 F, drying times will be at least 7 days. If average daytime temperatures are below 80 F, drying times will be at least 30 days. b) Scalding water wash (at least 140 F) with varying high- and low-pressure spray to dislodge pathogens, vegetation, and contaminated sediment. c) Freezing at a temperature of less than 32 F for more than 72 hours. d) Soaking in a CDFW-approved disinfectant solution for at least two minutes (or longer, depending on the disinfectant used). To avoid harm to non-target species, disinfected clothing and equipment will be thoroughly rinsed in a water bath before entering the stream. e) Repeat decontamination is required only if the equipment/clothing is removed from the site, used within a different water body, and returned to the Project site. Decontamination will take place in an upland location, preferably in the staging area, and any chemicals used during decontamination will be prevented from entering water bodies or storm water drains.	ITP Condition # 8.12	Before commencing ground- or vegetation-disturbing activities/ Entire Project	Permittee	

15	Rock Slope Protection Filter Fabric Prohibition. No rock slope protection (RSP) filter fabric, geo-textile material or similar plastic-derived materials are authorized for permanent use within the Project Area under the terms of this ITP.	ITP Condition # 8.13	Before commencing ground- or vegetation-disturbing activities/ Entire Project	Permittee	
16	Habitat Management Land Acquisition and Restoration: CDFW has determined that habitat restoration, enhancement and long-term management of compensatory habitat is necessary and required pursuant to CESA to fully mitigate Project-related impacts of the taking on the Covered Species that will result with implementation of the Covered Activities. This determination is based on factors including an assessment of the importance of the habitat in the Project Area, the extent to which the Covered Activities will impact the habitat, and CDFW's estimate of the acreage required to provide for adequate compensation. To meet this requirement, the Permittee shall restore approximately 0.08 acres of temporary aquatic and riparian habitat disturbance on-site, enhance and restore approximately 50 linear feet of riparian habitat on-site that is contiguous with other Covered Species habitat and install a Covered Species Rootwad fascine bundle/willow habitat features, and manage the Habitat Management (HM) pursuant to Conditions of Approval 9.3 below. Long-term funding for monitoring and management of created Covered Species habitat must be complete before starting Covered Activities or within 18 months of the effective date of this ITP if Security is provided pursuant to Condition of Approval 10 below for all uncompleted obligations.	ITP Condition # 9	Before commencing ground- or vegetation-disturbing activities (or within 18 months of issuance of the ITP if Security is provided)	Permittee	
17	Cost Estimates. CDFW has estimated the cost of habitat creation, restoration, and long-term management of Covered Species habitat creation and restoration of temporarily disturbed habitat as follows: On-Site habitat restoration and enhancement costs for a total of 0.08 acres of Covered Species riparian and aquatic habitat including 50 linear feet of dense willow staking and a wildlife crossing under the new bridge structure estimated at $26,168.00. Long-term management funding as described in Condition of Approval 9.2, estimated at $38,607.00. Management funding is estimated initially for the purpose of providing Security to ensure implementation of habitat creation, restoration, monitoring and management. All costs associated with CDFW engaging an outside contractor to complete the mitigation tasks, including but not limited to acquisition, protection, and perpetual funding and management of the HM lands and restoration of temporarily disturbed habitat. These costs include but are not limited to the cost of issuing a request for proposals, transaction costs, contract administration costs, and costs associated with monitoring the contractor's work $40,000.00.	ITP Condition # 9.1	Before commencing ground- or vegetation-disturbing activities (or within 18 months of issuance of the ITP if Security is provided)	Permittee	
18	Management Fund. The Permittee shall ensure that HM lands are managed, maintained, and monitored as described in this ITP. Permittee shall provide ten years of monitoring and management funding for activities outlined in the final accepted Habitat Enhancement and Long-Term Management Plan consistent with Measure 9.3 below.	ITP Condition # 9.2	Before commencing ground- or vegetation-disturbing activities (or within 18 months of issuance of the ITP if Security is provided)	Permittee	
19	On-Site Habitat Enhancement Plan. The Permittee shall be responsible for submitting an On-Site Habitat Enhancement Plan to address an area of at least 0.08 acres. The plan shall be submitted to CDFW for written review and acceptance at least 30 days prior to the initiation of Covered Activities. The plan shall address revegetating all access routes, staging areas and areas of temporary impacts within Covered Species habitat. Areas that are shaded by the	ITP Condition # 9.3	30 days before commencing ground or vegetation activities	Permittee	

	bridge or unvegetated prior to construction do not require revegetation and shall only require contouring and grading to match pre-project conditions. All other applicable areas of barren soil or upland habitat shall be hydro-seeded or planted with native vegetation appropriate to the Project Site. The plan shall include 50 liner feet of willow staking. All on-site tree and woody vegetation plantings shall be subject to a ten-year monitoring period as specified in Condition 9.3.1 and 75% success criteria for survivorship. All hydro-seeding shall be monitored and compared utilizing before and after images to determine success. If hydro-seeding does not take hold within 6 months, additional applications shall be required. If any tree or woody vegetation plantings fail, additional plantings shall be required and additional years of monitoring shall be required in consultation with CDFW until the success criteria are achieved as noted above. All disturbed areas shall be monitored and controlled for invasive species rated as “High” by the California Invasive Plant Council's database, which is accessible at: https://www.cal-ipc.org/plants/inventory/. All locations shall be required to obtain a 10% or less ground cover percentage for species rated as “High” annually for five-years as specified in this Agreement. Reference site analysis and final approval of an enhancement site as having all obligations met may be accepted upon written request and written approval from CDFW. Alternative concepts for enhancement, such as land acquisition or permanent protection may be considered upon written request and written approval to CDFW. All temporary irrigation systems shall be removed upon completion of site enhancements or at such a time when supplemental watering is no longer required.				
20	On-Site Channel Analysis. A qualified professional, such as a fluvial geomorphologist or hydraulic engineer or other qualified professional (approved in advance by CDFW) shall develop a channel analysis monitoring program in coordination with CDFW to analyze channel conditions a minimum of 30 days prior to Covered Activities as baseline. The survey shall also document any post-construction channel forming events over the monitoring period as specified in Condition 9.3.1. Photo monitoring and/or video monitoring during the most likely channel forming event timeframe is recommended. All On-Site Channel analysis results shall be provided as a sub-section of the On-Site Enhancement Plan Annual Monitoring Report.	ITP Condition # 9.3.2	Before commencing ground- or vegetation-disturbing activities	Permittee	
21	On-Site Covered Species Habitat Improvement. Clean spawning-sized gravel (2- to 4-inch creek-run rock) shall be used for any gravel fill that is required for creek diversions. The Permittee shall remove fill material to the extent feasible during diversion removal; any rock that cannot be collected will be left in streambed to enhance Covered-Species habitat.	ITP Condition # 9.3.3	Before commencing ground- or vegetation-disturbing activities/ Entire Project	Permittee	
22	Security: The Permittee may proceed with Covered Activities only after the Permittee has ensured funding (Security) to complete any activity required by Condition of Approval 9 that has not been completed before Covered Activities begin. Permittee shall provide Security as follows: Master Funding Agreement. Security for this ITP shall be governed by the Master Funding Agreement between the California Department of Fish and Wildlife and the California Department of Transportation, dated September 3, 2021. Funding Memorandum. Permittee has prepared and CDFW has approved, the project-specific Funding Memorandum required by the Master Funding Agreement and attached to this ITP as Attachment 3. Security Amount. The Security shall be in the amount of $104,775.00. This amount is based on the cost estimates identified in Condition of Approval 9.1 above and the Funding Memorandum. Funding of the Child Expenditure Authorization (EA). Permittee has created and funded the Child EA with funds equivalent to the Security Amount.	ITP Condition # 10	Before commencing ground- or vegetation-disturbing activities (or within 18 months of issuance of the ITP if Security is provided)	Permittee	

	Compliance with the Master Funding Agreement. Permittee shall complete all requirements set forth in the Master Funding Agreement and shall at all times comply with the terms and conditions of that Agreement. Even if Security is provided, the Permittee must complete the required acquisition, protection and transfer of all HM lands and record any required conservation easements no later than 18 months from the effective date of this ITP. CDFW may require the Permittee to provide additional HM lands and/or additional funding to ensure the impacts of the taking are minimized and fully mitigated, as required by law, if the Permittee does not complete these requirements within the specified timeframe.				
	DURING CONSTRUCTION				
23	Construction Monitoring Documentation. The Designated Biologist(s) and Biological Monitor(s)shall maintain construction-monitoring documentation on-site in either hard copy or digital format throughout the construction period, which shall include a copy of this ITP with attachments and a list of signatures of all personnel who have successfully completed the education program. Permittee shall ensure a copy of the construction-monitoring documentation is available for review at the Project site upon request by CDFW.	ITP Condition # 6.5	Entire Project	Permittee	
24	Dust Control. Permittee shall implement dust control measures during Covered Activities to facilitate visibility for monitoring of the Covered Species by the Designated Biologist. Permittee shall keep the amount of water used to the minimum amount needed and shall not allow water to form puddles.	ITP Condition # 6.7	Entire Project	Permittee	
25	Erosion Control Materials. Permittee shall prohibit use of erosion control materials potentially harmful to Covered Species and other species. Use of monofilament synthetic netting (erosion control matting) or similar material shall be prohibited within the Project Area.	ITP Condition # 6.8	Entire Project	Permittee	
26	Project Access. Project-related personnel shall access the Project Area using existing routes, or routes identified in the Project Description and shall not cross Covered Species' habitat outside of or en route to the Project Area. Permittee shall restrict Project-related vehicle traffic to established roads, staging, and parking areas. Permittee shall ensure that vehicle speeds do not exceed 20 miles per hour to avoid Covered Species on or traversing the roads. If Permittee determines construction of routes for travel are necessary outside of the Project Area, the Designated Representative shall contact CDFW for written approval before carrying out such an activity. CDFW may require an amendment to this ITP, among other reasons, if additional take of Covered Species will occur as a result of the Project modification.	ITP Condition # 6.11	Entire Project	Permittee	
27	Staging Areas. Permittee shall confine all Project-related parking, storage areas, laydown sites, equipment storage, and any other surface-disturbing activities to the Project Area using, to the extent possible, previously disturbed areas. Additionally, Permittee shall not use or cross Covered Species' habitat outside of the marked Project Area unless provided for as described in Condition of Approval 6.11 of this ITP.	ITP Condition # 6.12	Entire Project	Permittee	
28	Hazardous Waste. Permittee shall immediately stop and, pursuant to pertinent state and federal statutes and regulations, arrange for repair and clean up by qualified individuals of any fuel or hazardous waste leaks or spills at the time of occurrence, or as soon as it is safe to do so. Permittee shall exclude the storage and handling of hazardous materials from the Project Area and shall properly contain and dispose of any unused or leftover hazardous products off-site.	ITP Condition # 6.13	Entire Project	Permittee	

29	CDFW Access. Permittee shall provide CDFW staff with reasonable access to the Project and shall otherwise fully cooperate with CDFW efforts to verify compliance with or effectiveness of mitigation measures set forth in this ITP.	ITP Condition # 6.14	Entire Project	Permittee	
30	Notification of Non-compliance. The Designated Representative shall immediately notify CDFW if the Permittee is not in compliance with any Condition of Approval of this ITP, including but not limited to any actual or anticipated failure to implement measures within the time periods indicated in this ITP and/or the MMRP. The Designated Representative shall follow up within 24 hours with a written report to CDFW describing, in detail, any non-compliance with this ITP and suggested measures to remedy the situation.	ITP Condition # 7.2	Entire Project	Permittee	
31	Compliance Monitoring. The Designated Biologist shall be on-site daily when Covered Activities occur including initial ground disturbance, vegetation removal or clearing, exclusionary fencing installation, concrete pours, concrete washouts, water diversion installation and water diversion removal. The Designated Biologist or Designated Representative (Approved in advance by CDFW) shall conduct compliance inspections each working day. The Designated Biologist or Designated Representative shall conduct compliance inspections to: (1) minimize incidental take of the Covered Species; (2) prevent unlawful take of species; (3) check for compliance with all measures of this ITP; (4) check all exclusion zones; and (5) ensure that signs, stakes, and fencing are intact, and that Covered Activities are only occurring in the Project Area. The Designated Representative or Designated Biologist shall prepare daily written observation and inspection records summarizing oversight activities and compliance inspections, observations of Covered Species and their sign, survey results, and monitoring activities required by this ITP. The frequency of biological monitoring and reporting will be assessed on an ongoing basis and will depend on the nature of the activities being conducted.	ITP Condition # 7.3	Entire Project	Permittee	
32	Monthly Compliance Report. The Designated Representative or Designated Biologist shall compile the observation and inspection records identified in Condition of Approval 7.3 into a Monthly Compliance Report and submit it to CDFW along with a copy of the MMRP table with notes showing the current implementation status of each mitigation measure. Monthly Compliance Reports shall be submitted to the CDFW offices listed in the Notices section of this ITP and via e-mail to CDFW's Regional Representative and Headquarters CESA Program. At the time of this ITP's approval, the CDFW Regional Representative is Robert Stanley, Senior Environmental Scientist (Specialist), (Robert.Stanley@wildlife.ca.gov) and Headquarters CESA Program email is CESA@wildlife.ca.gov. CDFW may at any time increase the timing and number of compliance inspections and reports required under this provision depending upon the results of previous compliance inspections. If CDFW determines the reporting schedule must be changed, CDFW will notify Permittee in writing of the new reporting schedule.	ITP Condition # 7.4	Entire Project	Permittee	
33	Annual Status Report. Permittee shall provide CDFW with an Annual Status Report (ASR) no later than January 31 of every year beginning with issuance of this ITP and continuing until CDFW accepts the Final Mitigation Report identified below. Each ASR shall include, at a minimum: (1) a summary of all Monthly Compliance Reports for that year identified in Condition of Approval 7.4; (2) a general description of the status of the Project Area and Covered	ITP Condition # 7.5	Entire Project	Permittee	

	Activities, including actual or projected completion dates, if known; (3) a copy of the table in the MMRP with notes showing the current implementation status of each mitigation measure; (4) an assessment of the effectiveness of each completed or partially completed mitigation measure in avoiding, minimizing and mitigating Project impacts; (5) all available information about Project-related incidental take of the Covered Species; (6) an accounting of the number of acres subject to both temporary and permanent disturbance, both for the prior calendar year, and a total since ITP issuance; and (7) information about other Project impacts on the Covered Species.				
34	CNDDB Observations. The Designated Biologist shall submit all observations of Covered Species to CDFW's California Natural Diversity Database (CNDDB) within 60 calendar days of the observation and the Designated Biologist shall include copies of the submitted forms with the next Monthly Compliance Report or ASR, whichever is submitted first relative to the observation.	ITP Condition # 7.6	Entire Project	Permittee	
35	Notification of Take or Injury/Damage. Permittee shall immediately notify the Designated Biologist if a Covered Species is taken or injured/damaged by a Project-related activity, or if a Covered Species is otherwise found dead or injured/damaged within the vicinity of the Project. The Designated Biologist or Designated Representative shall provide initial notification to CDFW by calling the Regional Office at (707) 428-2002. Initial notification shall also be provided to the CDFW Regional Representative is Robert Stanley, Senior Environmental Scientist (Specialist), (707) 339-6534 (Robert.Stanley@wildlife.ca.gov). The initial notification to CDFW shall include information regarding the location, species, and number of animals taken or injured/damaged and the ITP Number (2081-2022-011-03). Following initial notification, Permittee shall send CDFW a written report within two calendar days. The report shall include the date and time of the finding or incident, location of the animal or carcass, and if possible, provide a photograph, explanation as to cause of take or injury/damage, and any other pertinent information.	ITP Condition # 7.8	Entire Project	Permittee	
36	Take Minimization Measures: The following requirements are intended to ensure the minimization of incidental take of Covered Species in the Project Area during Covered Activities. Permittee shall implement and adhere to the following conditions to minimize take of Covered Species:	ITP Condition # 8	Entire Project	Permittee	
37	Seasonal Work Window and Weather. Permittee shall limit Covered Activities to the period between June 1 and October 15, until the expiration of this ITP, unless otherwise authorized in writing by CDFW. Permittee shall monitor the National Weather Service 72-hour forecast for the Project Area. No Covered Activities shall occur during a rain event and in dry weather only within the Project Area. No Project activities will be started if the associated erosion control measures cannot be completed prior to the onset of precipitation. No Covered Activities shall occur if there is a 40 percent chance of precipitation or greater in the National Weather Service 72-hour forecast for the Project Area. Covered Activities may continue 24 hours after the rain ceases if there is less than a 40 percent chance of precipitation in the 24-hour forecast for the Project Area.	ITP Condition # 8.1	Entire Project	Permittee	
38	Time of Day Work Restriction. For any activity that will clear, grub, remove existing unpaved features, excavate embankments, remove existing drainage features, construct new drainage features or excavate soil that is not covered by a paved area, the Permittee shall terminate all Covered Activities 30 minutes before sunset and shall not resume Covered Activities until 30 minutes after sunrise unless approved by the CDFW Representative in writing. The Permittee shall use sunrise and sunset times established by the U.S. Naval Observatory Astronomical Applications Department for determining when Covered Activities shall terminate and resume.	ITP Condition # 8.2	Entire Project	Permittee	

39	Daily Aquatic Species Checks. Before the start of work each day and throughout the course of the day as determined by the Designated Biologist, the Project Area shall be inspected for any Covered Species or aquatic species as specified in Condition of Approval 8.7. Aquatic species shall be removed by the Designated Biologist and translocated to a safe location as specified in Condition of Approval 8.7.	ITP Condition # 8.5	Entire Project	Permittee	
40	Permanent Lighting Prohibition. No new or replacement of existing permanent light sources are authorized under the terms of this ITP.	ITP Condition # 8.8	Entire Project	Permittee	
41	Temporary Lighting Avoidance and Minimization. All temporary Project lighting associated with construction staging areas, access routes and construction sites shall be shut down upon the completion of work each day and not used as security lighting overnight. Temporary Project lighting on the surface of the road shall be directed towards the road surface and shall not be directed into areas outside of the road surface to prevent additional light pollution and disruption of nocturnal wildlife activity. Baffles and various shading devices may be employed.	ITP Condition # 8.9	Entire Project	Permittee	
42	Spill Containment and Clean Up. Prior to entering the work site, all field personnel shall know the location of spill kits and trained in their appropriate use. All activities performed in or near a river, stream, or lake shall have absorbent materials designated for spill containment and cleanup activities on-site for use in an accidental spill. CDFW shall be notified by the Permittee within 24 hours of all spills and consulted regarding clean-up procedures.	ITP Condition # 8.11	Entire Project	Permittee	
43	On-Site Habitat Enhancement Plan Monitoring and Reporting. The Permittee shall submit an On-Site Habitat Enhancement Report to CDFW by December 31 over a ten-year period, as well as any additional years, as applicable. Annual monitoring will be submitted for years 1 through 5 and in Year 7 and 10. A reduction in monitoring and reporting may be authorized upon written request and approval from CDFW. The report shall include success criteria milestones. The report shall also include photos from designated photo stations, a summary of site conditions and a list of wildlife observed on site. The report shall also include a list of corrective actions that may be necessary to increase the probability of native plant recruitment or habitat improvement to the Project Area.	ITP Condition # 9.3.1	Entire Project	Permittee	
	POST-CONSTRUCTION				
44	Refuse Removal. Upon completion of Covered Activities, Permittee shall remove from the Project Area and properly dispose of all temporary fill and construction refuse, including, but not limited to, broken equipment parts, wrapping material, cords, cables, wire, rope, strapping, twine, buckets, metal or plastic containers, and boxes.	ITP Condition # 6.15	Post-Construction	Permittee	
45	Final Mitigation Report. No later than 60 days after completion of all Covered Activities, Permittee shall provide CDFW with a Final Mitigation Report. The Designated Biologist shall prepare the Final Mitigation Report which shall include, at a minimum: (1) a summary of all Monthly Compliance Reports and all ASRs; (2) a copy of the table in the MMRP with notes showing when each of the mitigation measures was implemented; (3) all available information about Project-related incidental take of the Covered Species; (4) information about other Project impacts on the Covered Species; (5) beginning and ending dates of Covered Activities; (6) an assessment of the effectiveness of this ITP's Conditions of Approval in minimizing and fully mitigating Project impacts of the taking on Covered Species; (7) recommendations on how mitigation measures might be changed to more effectively minimize take and mitigate the impacts of future projects on the Covered Species; and (8) any other pertinent information.	ITP Condition # 7.7	Post-Construction	Permittee	

DocuSign Envelope ID: EF8475C0-0470-4E52-B5B5-25D92AE11799

DocuSign Envelope ID: EF8475C0-0470-4E52-B5B5-25D92AE11799

Project Name:
LSA Agreement/ITP Number(s):

Department of Fish and Wildlife

BIOLOGIST RESUME COVER SHEET

SUBMIT EACH RESUME AS A SEPARATE DOCUMENT

Number of Resumes Included in Transmittal: _____

Name	Requested Role(s)[1]	Species/Resource(s)

[1] Requested roles correspond to the biological staffing requirements indicated in the Lake and Streambed Alteration (LSA) Agreement or California Endangered Species Act Incidental Take Permit (ITP). Roles may include a "Qualified Biologist" or "Designated Biologist" with the necessary experience to survey for special status species, or a "Biological Monitor" with the necessary experience to monitor construction activities for special status species. An individual may request more than one role.

DocuSign Envelope ID: EF8475C0-0470-4E52-B5B5-25D92AE11799

Project Name:
LSA Agreement/ITP Number(s):

Department of Fish and Wildlife

BIOLOGIST RESUME FORM

This form requests information about the qualifications of the Qualified Biologist, Designated Biologist and Biological Monitor specified in California Endangered Species Act Incidental Take Permits (ITP) and Lake or Streambed Alteration (LSA) Agreements issued by California Department of Fish and Wildlife (CDFW).

Completing this form will ensure the receipt of adequate information and expedite CDFW review of qualifications.

SECTION I. NAME AND CONTACT INFORMATION

Name:		Title:	
Company Name & Address:		Phone:	
		Email:	

SECTION II. EDUCATION

College/University & Degree Type Related to Natural Resource Science:	
Other Relevant Workshops & Training:	

SECTION III. ROLE(S) AND PERMIT REQUIREMENTS

Requested Role(s):	
Relevant LSA Agreement Measures or ITP Conditions[2]:	

SECTION IV. SPECIES AND RESOURCE EXPERIENCE – SUMMARY

This section summarizes experience by special status species and other resource. Use one row for each species or other resource where surveys or special protections are required in the CESA ITP or LSA Agreement for which biologist approval is requested.[3] If more space is needed, add rows to this table. Provide details in Section 5.

Species or Resource	Number of Field Seasons & Hours, Life Stages Observed *Provide project details in Section 5*	Life History Knowledge *Describe formal workshops & training with dates, or informal training details*	CDFW SCP, MOU, & USFWS 10a1a Authorization Number & Authorized Activities *This form does not fulfill SCP, MOU, & USFWS 10a1a reporting requirements*	
Insert Species or Resource 1	Field seasons: Hours: Life Stages:			Issued to: Expiration: Agency contact:
Insert Species or Resource 2	Field seasons: Hours: Life Stages:			Issued to: Expiration: Agency contact:
Insert Species or Resource 3	Field seasons: Hours: Life Stages:			Issued to: Expiration: Agency contact:

[2] List all measures and conditions from the LSA Agreement or ITP requiring biological staff (i.e., Qualified Biologist, Designated Biologist, or Biological Monitor).

[3] Often LSA Agreements/ITPs require surveys and other protections for multiple species and other resources. Include only those for which the biologist has experience and is requesting approval.

Project Name:
LSA Agreement/ITP Number(s):

SECTION V. SPECIES AND RESOURCE EXPERIENCE – DETAILS

This section details experience from the three most recent and relevant projects for each species and resource identified in Section 4. If more space is needed, attach additional pages in the same table format (i.e., copy/paste format).

A. Species or Resource:			
Project 1 Name & Location:		Project Start & End Dates:	
LSA Agreement, ITP, or Other Agency Permit Number:		Role(s)[4]:	
Survey Type(s)[5]:		Construction Monitoring[6]:	Days: Activities:
Species Life Stages Observed & Handled, Number of Each:	Life Stage: Number Observed: Number Handled: Reported to CNDDB[7] (Y/N):	Company Name, Professional Reference Name, Phone, Email:	
If not reported to CNDDB, why:			
CDFW and Other Agency Email:			
Project 2 Name & Location:		Project Start & End Dates:	
LSA Agreement, ITP, or Other Agency Permit Number:		Role(s):	
Survey Type(s):		Construction Monitoring:	Days: Activities:
Species Life Stages Observed & Handled, Number of Each:	Life Stage: Number Observed: Number Handled: Reported to CNDDB (Y/N):	Company Name, Professional Reference Name, Phone, Email:	
If not reported to CNDDB, why:			
CDFW and Other Agency Email:			
Project 3 Name & Location:		Project Start & End Dates:	
LSA Agreement, ITP, or Other Agency Permit Number:		Role(s):	
Survey Type(s):		Construction Monitoring:	Days: Activities:

[4] Insert the role as described in the associated LSA Agreement, ITP or other agency permit. If these permits were not issued, describe the role based on the duties, e.g., "lead biologist with handling authorization" or "biological monitor."
[5] For example, pre-construction survey or description of the protocol or guideline followed.
[6] Include the number of days and describe the types of activities monitored (e.g., heavy equipment operation).
[7] CNDDB is the abbreviation for California Natural Diversity Database.

Project Name:
LSA Agreement/ITP Number(s):

Species Life Stages Observed & Handled, Number of Each:	Life Stage: Number Observed: Number Handled: Reported to CNDDB (Y/N):	Company Name, Professional Reference Name, Phone, Email:	
If not reported to CNDDB, why:			
CDFW and Other Agency Email:			
Additional Information:			

B. Species or Resource:			
Project 1 Name & Location:		Project Start & End Dates:	
LSA Agreement, ITP, or Other Agency Permit Number:		Role(s):	
Survey Type(s):		Construction Monitoring:	Days: Activities:
Species Life Stages Observed & Handled, Number of Each:	Life Stage: Number Observed: Number Handled: Reported to CNDDB (Y/N):	Company Name, Professional Reference Name, Phone, Email:	
If not reported to CNDDB, why:			
CDFW and Other Agency Email:			
Project 2 Name & Location:		Project Start & End Dates:	
LSA Agreement, ITP, or Other Agency Permit Number:		Role(s):	
Survey Type(s):		Construction Monitoring:	Days: Activities:
Species Life Stages Observed & Handled, Number of Each:	Life Stage: Number Observed: Number Handled: Reported to CNDDB (Y/N):	Company Name, Professional Reference Name, Phone, Email:	
If not reported to CNDDB, why:			
CDFW and Other Agency Email:			
Project 3 Name & Location:		Project Start & End Dates:	
LSA Agreement, ITP, or Other Agency Permit Number:		Role(s):	
Survey Type(s):		Construction Monitoring:	Days: Activities:

Project Name:
LSA Agreement/ITP Number(s):

Species Life Stages Observed & Handled, Number of Each:	Life Stage: Number Observed: Number Handled: Reported to CNDDB (Y/N):	Company Name, Professional Reference Name, Phone, Email:	
If not reported to CNDDB, why:			
CDFW and Other Agency Email:			
Additional Information:			

C. Species or Resource:			
Project 1 Name & Location:		Project Start & End Dates:	
LSA Agreement, ITP, or Other Agency Permit Number:		Role(s):	
Survey Type(s):		Construction Monitoring:	Days: Activities:
Species Life Stages Observed & Handled, Number of Each:	Life Stage: Number Observed: Number Handled: Reported to CNDDB (Y/N):	Company Name, Professional Reference Name, Phone, Email:	
If not reported to CNDDB, why:			
CDFW and Other Agency Email:			
Project 2 Name & Location:		Project Start & End Dates:	
LSA Agreement, ITP, or Other Agency Permit Number:		Role(s):	
Survey Type(s):		Construction Monitoring:	Days: Activities:
Species Life Stages Observed & Handled, Number of Each:	Life Stage: Number Observed: Number Handled: Reported to CNDDB (Y/N):	Company Name, Professional Reference Name, Phone, Email:	
If not reported to CNDDB, why:			
CDFW and Other Agency Email:			
Project 3 Name & Location:		Project Start & End Dates:	
LSA Agreement, ITP, or Other Agency Permit Number:		Role(s):	
Survey Type(s):		Construction Monitoring:	Days: Activities:

Project Name:
LSA Agreement/ITP Number(s):

Species Life Stages Observed & Handled, Number of Each:	Life Stage: Number Observed: Number Handled: Reported to CNDDB (Y/N):	Company Name, Professional Reference Name, Phone, Email:	
If not reported to CNDDB, why: CDFW and Other Agency Email:			
Additional Information:			

DocuSign Envelope ID: EF8475C0-0470-4E52-B5B5-25D92AE11799

EXHIBIT B TO MASTER FUNDING

AGREEMENTFUNDING

MEMORANDUM

1. Name of Project: San Lorenzo River Bridge and Kings Creek Bridge Replacement Project

2. Brief Description of the Project: The project proposes to replace the San Lorenzo River and Kings Creek Bridges on State Route 9, in Santa Cruz County.

3. Incidental Take Permit Number or Consistency Determination Number:

   The San Lorenzo ITP - 2081-2022-011-03
   The Kings Creek ITP - 2081-2022-012-03

4. CALTRANS parent project EA and program funding source: 05-1H470

5. CALTRANS Child EA and program funding source: 05-1H471, SHOPP

6. Estimated costs of Mitigation (including monitoring):

   San Lorenzo Bridge: **$104,775.00**.

   Kings Creek Bridge: **$97,899.00**

   Total: $202,674

7. Total amount for security (combined total of estimated costs of Mitigation andMonitoring): **$202,674**

The funds for this project have been currently budgeted and allocated, for the project as described above. The funds that have been allocated for mitigation and monitoring will not bere-allocated to another element of the project or expended for any purpose other than completing the mitigation and monitoring requirements.

Signature Jennifer Moonjian Date 6/3/2022

Instruction: This form is to be transmitted by CALTRANS to CDFW with each application for an incidental take permit under Fish and Game Code section 2081, and with each request fora Consistency Determination under Fish and Game Code section 2080.1. CALTRANS personnel who signs permit shall also sign this form.