DocuSign Envelope ID: A02FC8C4-93F1-485A-825A-27F65F9A227E

State of California – Natural Resources Agency
DEPARTMENT OF FISH AND WILDLIFE
Bay Delta Region
2825 Cordelia Road, Suite 100
Fairfield, CA 94534
(707) 428-2002
www.wildlife.ca.gov

GAVIN NEWSOM, Governor
CHARLTON H. BONHAM, Director

January 25, 2024

Earl Callison
GBN Partners, LLC
3820 Blackhawk Road, Danville, CA 94506
earl@blackhawkproperties.com

Subject: Incidental Take Permit 2081-2021-097-03 for Creekside/Vineyards at Sand Creek Project, Contra Costa County

Dear Mr. Callison:

Enclosed you will find an electronic copy of the Incidental Take Permit for the above referenced Project, which has been digitally signed by the California Department of Fish and Wildlife (CDFW). Please read the permit carefully, sign the acknowledgement, and return the original **no later than 30 days from CDFW signature**, and prior to initiation of ground-disturbing activities. You may return an electronic copy of the permit with digital signature to CESA@wildlife.ca.gov. Digital signatures shall comply with Government Code section 16.5. Alternatively, you may return a hard copy of the permit via mail to:

California Department of Fish and Wildlife
Habitat Conservation Planning Branch, CESA Permitting
Post Office Box 944209
Sacramento, CA 94244-2090

You are advised to keep the permit in a secure location and distribute copies to appropriate project staff responsible for ensuring compliance with the conditions of approval of the permit. Note that you are required to comply with certain conditions of approval prior to initiation of ground-disturbing activities. Additionally, a copy of the permit must be maintained at the project work site and made available for inspection by CDFW staff when requested.

The permit will not take effect until the signed acknowledgement is received by CDFW. If you wish to discuss these instructions or have questions regarding the permit, please contact Michelle Battaglia, Senior Environmental Scientist (Supervisory), at (707) 339-6052 or Michelle.Battaglia@wildlife.ca.gov.

Sincerely,

DocuSigned by:
Erin Chappell
B77E9A6211EF486...

Erin Chappell
Regional Manager
Bay Delta Region

DocuSign Envelope ID: A02FC8C4-93F1-485A-825A-27F65F9A227E

California Department of Fish and Wildlife
Bay Delta Region
2825 Cordelia Road, Suite 100
Fairfield, CA 94534

California Endangered Species Act
Incidental Take Permit No. 2081-2021-097-03

CREEKSIDE/VINEYARDS AT SAND CREEK PROJECT

I. Authority:

This California Endangered Species Act (CESA) incidental take permit (ITP) is issued by the California Department of Fish and Wildlife (CDFW) pursuant to Fish and Game Code section 2081, subdivisions (b) and (c), and California Code of Regulations, Title 14, section 783.0 et seq. CESA prohibits the take[1] of any species of wildlife designated by the California Fish and Game Commission as an endangered, threatened, or candidate species.[2] However, CDFW may authorize the take of any such species by permit pursuant to the conditions set forth in Fish and Game Code section 2081, subdivisions (b) and (c). (See Cal. Code Regs., tit. 14, § 783.4).

Permittee:	**GBN Partners, LLC**
Principal Officer:	**Earl Callison**
Contact Person:	**Mark Jasper, (925) 947-4867 ext. 223**
Mailing Address:	**3820 Blackhawk Road, Danville, CA 94506**
E-mail Address:	**earl@blackhawkproperties.com**

II. Effective Date and Expiration Date of this ITP:

This ITP shall become effective when signed by all parties and received by CDFW as described in the Notices section of this ITP. Unless renewed by CDFW, this ITP and its authorization to take the Covered Species shall expire on **December 31, 2029**.

Notwithstanding the expiration date on the take authorization provided by this ITP, Permittee's obligations pursuant to this ITP do not end until CDFW accepts as complete the Permittee's Final Mitigation Report required by Condition of Approval 7.8 (Final Mitigation Report) of this ITP.

[1]Pursuant to Fish and Game Code section 86, "'take' means hunt, pursue, catch, capture, or kill, or attempt to hunt, pursue, catch, capture, or kill." (See also *Environmental Protection Information Center v. California Department of Forestry and Fire Protection* (2008) 44 Cal.4th 459, 507 [for purposes of incidental take permitting under Fish and Game Code section 2081, subdivision (b), "'take' … means to catch, capture or kill".)

[2]The definition of an endangered, threatened, and candidate species for purposes of CESA are found in Fish and Game Code sections 2062, 2067, and 2068, respectively.

III. Project Location:

The Creekside/Vineyards at Sand Creek Project (Project) is located west of Highway 4 and south of Lone Tree Way within the City of Antioch, Contra Costa County (See Figure 1 – Project Site Location Map). The Project is located immediately south of existing residential development bounded by Heidorn Ranch Road to the east and Hillcrest Avenue to the west. The Project Area is bounded by Sand Creek to the north. The Project location midpoint is at approximately Latitude 37.944495, Longitude -121.754442, Assessor's Parcel Number 057-050-024.

IV. Project Description:

The Project will construct 220 single-family residences and associated infrastructure. This includes, but is not limited to: parking areas; trails; landscaping; roads; bridges; detention basins; utility installations; a box culverted road crossing; two stormwater outfall structures discharging into Sand Creek, a third outfall draining into an upland grassland area; and approximately 11 acres of mass grading on the perimeter of the development footprint. The Project will also construct off-site improvements on 1.5 acres of existing disturbed area on the adjacent parcel to the west near the northwestern corner of the Project. The off-site improvements on the adjacent parcel consist of grading to accommodate construction of the proposed Hillcrest Avenue extension through the eastern edge of the off-site parcel, which is on the Project's western boundary. See Figure 1 (Project Site Location Map). Aside from the on-site 57.8 acres to be developed, the remaining 100.4 acres will remain undeveloped.

Two (2) bridges will be constructed over Sand Creek. The first is a clear span Emergency Vehicle Access (EVA)/pedestrian bridge that will be constructed parallel to, adjacent to, and 25 feet west of the existing Pacific Gas and Electric Company (PG&E) bridge over Sand Creek near the northeast corner of the Project Area. The second bridge will be a buried arch bridge in the northwest corner of the Project that will extend Hillcrest Avenue south of Sand Creek along the western side of the residential development. The Hillcrest Avenue bridge will be constructed in the ultimate width to facilitate two southbound and two northbound lanes. A 6-foot by 12-foot concrete box culverted road crossing will be installed within the banks of an un-named tributary to Sand Creek running along the eastern perimeter of the 57.8-acre development footprint. It will serve as a crossing over the ephemeral tributary for the access road to the proposed detention basins.

The main water quality detention basin to serve the development will be created east of the residential area, adjacent to Sand Creek on the eastern side of the Project. Two detention basins will collect and treat stormwater for residential development. Treated stormwater from these two basins will flow north into Sand Creek via a 60-inch outfall structure constructed on the south side of an existing outfall.

A second "clean water" outfall into Sand Creek will be constructed adjacent to the Hillcrest Avenue bridge north of the residential area, in the northwest corner of the Project. The 48-inch outfall will be located on the south bank of Sand Creek. Natural drainage from the northern portion of the adjacent western hillslope will be collected and discharged via this outfall structure.

A third 48-inch "clean water" stormwater outfall (dispersal point) will be installed east of the residential area, at the far southeastern end of the Project. Runoff from the southern portion of the western hillslope will be collected via a concrete v-ditch adjacent to Hillcrest Road and directed into this storm drain outfall. This outfall will have a headwall and concrete energy dissipator at its terminus and will be secured by riprap to allow water to slowly dissipate into an upland grassland area in the southeast corner of the Project before it reaches the un-named ephemeral tributary.

There will be two staging areas with a combined area of one-acre, located in existing impacted areas. The staging areas will be adjacent to the EVA/pedestrian bridge and in the area slated for construction of residential lots adjacent to Hillcrest Avenue Bridge. See Figure 2 (Project Site Impacts Overview) and Figure 3 (Overview and Engineering Designs).

Table 1. Project Impact Summary Table

Structure	Temporary Impacts (acres)	Permanent Impacts (acres)	Total Impact (acres
*3 Stormwater Outfalls	0.03	0.06	0.09
*Box Culvert	0.15	0.05	0.20
*Emergency Vehicle Access/Pedestrian Bridge	0.04	0.15	0.19
*Hillcrest Avenue Bridge	0.07	0.09	0.16
*Detention Basins	--	3.00	3.00
Perimeter Grading	11.00	--	11.00
*Residential Housing Development	--	54.45	54.45
Totals:	Total Temporary Impact: 11.29	Total Permanent Impact: 57.80	Total Impact: 69.09

* Included in 57.8 acres permanent impact footprint

Dry utilities and water lines will be installed within the Hillcrest Avenue bridge to connect to utilities in Hillcrest Avenue. Water, sewer, and dry utilities will be attached to the EVA/pedestrian bridge to connect with existing utilities in Heidorn Ranch Road. The development will also require grading on approximately 11 acres located outside the development footprint but within the property boundaries. The grading area will be contoured and hydroseeded with a native herbaceous mix.

Mass grading and infrastructure (including bridges and outfalls) will be completed in 6 to 12 months. The residential units will be constructed at an undetermined time, depending on factors such as availability of materials, labor, and market conditions. The site will be

developed in three phases. Phase I will include construction of the residential lots east of Hillcrest Avenue and north of the main entry. Phase II will include construction of the residential lots east of Hillcrest Avenue and south of the main entry. Phase III will include construction of the residential lots west of Hillcrest Avenue and a park area within the PG&E tower easement along Hillcrest Avenue.

V. Covered Species Subject to Take Authorization Provided by this ITP:

This ITP covers the following species:

Name	CESA Status[3]
1. California Tiger Salamander (*Ambystoma californiense*)	Threatened[4]

This species, and only this species, is the "Covered Species" for the purposes of this ITP.

VI. Impacts of the Taking on Covered Species:

Project activities and their resulting impacts are expected to result in the incidental take of individuals of the Covered Species. The activities described above which are expected to result in incidental take of individuals of the Covered Species include, but are not limited to, vegetation and tree removal; grubbing; grading; scraping; trenching and back filling; compaction, excavation and stockpiling material; materials and equipment transport and laydown; exclusion fence installation and removal; heavy equipment operation; ground compaction; road construction; bridge and box culvert construction; dewatering; rewatering; stormwater outfall and detention basin construction; RSP placement; vehicle traffic; trail construction; paving; utility installation; landscaping and construction finish work prior to selling homes/buildings; relocation of the Covered Species, and other development activities related to the Project (Covered Activities).

Incidental take of individuals of the Covered Species in the form of mortality ("kill") may occur as a result of Covered Activities such as vehicle or heavy equipment strikes during site preparation and hauling of materials and spoils; collapse or excavation of occupied burrows that causes crushing or suffocation of underground individuals during vegetation removal, grubbing, mass grading, excavation, compaction, and trenching; entombment of individuals from placing soils over occupied burrows and during soil compaction, grading activities, and development of roadbeds, structure building pads, and other surface infrastructure; crushing by equipment; vehicle strikes on access roads, vehicle mobilization pathways and parking areas from Project-related traffic; crushing during installation/removal of exclusion fencing. Mortality of individuals of the Covered Species may also result from denuding of the project site and other construction-related items creating impediment to movement across the Project site, causing desiccation and predation; and entrapment in artificial structures. crushing under vehicular or foot traffic or other activities. Incidental take of individuals of the Covered Species may also occur from the Covered Activities in the form of pursue, catch,

[3] Under CESA, a species may be on the list of endangered species, the list of threatened species, or the list of candidate species.
[4] See Cal. Code Regs. tit. 14 § 670.5, subd. (b)(3)(G).

DocuSign Envelope ID: A02FC8C4-93F1-485A-825A-27F65F9A227E

capture, or attempt to do so arising from capture and relocation activities; capture or entrapment in holes or trenches; or by uncovering through the excavation of burrow systems. The areas where authorized take of the Covered Species is expected to occur include: the bed and banks of Sand Creek, the 57.8 acres of the development footprint, the 11-acre area where Project-related grading will occur, a 1.5-acre portion of an off-site parcel, upland areas where the stormwater collection system will be constructed, staging areas, and within the construction footprint of the new bridges and box culvert road crossing (Collectively, the Project Area).

The Project is expected to cause the permanent loss of 57.8 acres of habitat for the Covered Species, and temporary loss of 11 acres of habitat for the Covered Species. Impacts of the authorized taking also include adverse impacts to the Covered Species related to temporal losses, increased habitat fragmentation and edge effects, and the Project's incremental contribution to cumulative impacts (indirect impacts). These impacts include: stress resulting from noise, light, and clearing and grubbing, earth moving, construction, and vehicle traffic; increased likelihood of injury or mortality during construction due to disorientation and creation of movement barriers; capture and relocation; and long-term effects due to increased pollution, displacement from preferred habitat, increased competition for food and space, exposure to contaminants, rodenticides, domestic pets, trash ingestion or entanglements; increased vulnerability to predation, and restriction of migration corridors.

VII. Incidental Take Authorization of Covered Species:

This ITP authorizes incidental take of the Covered Species and only the Covered Species. With respect to incidental take of the Covered Species, CDFW authorizes the Permittee, its employees, contractors, and agents to take Covered Species incidentally in carrying out the Covered Activities, subject to the limitations described in this section and the Conditions of Approval identified below. This ITP does not authorize take of Covered Species from activities outside the scope of the Covered Activities, take of Covered Species outside of the Project Area, take of Covered Species resulting from violation of this ITP, or intentional take of Covered Species except for capture and relocation of Covered Species as authorized by this ITP.

VIII. Conditions of Approval:

Unless specified otherwise, the following measures apply to all Covered Activities within the Project Area, including areas used for vehicular ingress and egress, staging and parking, and noise and vibration generating activities that may cause take. CDFW's issuance of this ITP and Permittee's authorization to take the Covered Species are subject to Permittee's compliance with and implementation of the following Conditions of Approval:

1. **Legal Compliance:** Permittee shall comply with all applicable federal, state, and local laws in existence on the effective date of this ITP or adopted thereafter.

2. **CEQA Compliance:** Permittee shall implement and adhere to the mitigation measures related to the Covered Species in the Biological Resources section of the Final Environmental Impact Report (SCH No.: 2020039044) certified by City of Antioch on April 14, 2021, as lead agency for the Project pursuant to the California Environmental Quality Act (CEQA) (Pub. Resources Code, § 21000 et seq.).

3. **LSA Agreement Compliance:** Permittee shall implement and adhere to the mitigation measures and conditions related to the Covered Species in the Lake and Streambed Alteration (LSA) Agreement (Notification No. EPIMS-CCA-20795-R3) for the Project executed by CDFW pursuant to Fish and Game Code section 1600 et seq.

4. **ESA Compliance:** Permittee shall implement and adhere to the terms and conditions related to the Covered Species in the Formal Consultation on the Creekside Vineyards at Sand Creek Project, Contra Costa County, California (2022-00034751-S7-001) for the Project pursuant to the Federal Endangered Species Act (ESA). For purposes of this ITP, where the terms and conditions for the Covered Species in the federal authorization are less protective of the Covered Species or otherwise conflict with this ITP, the conditions of approval set forth in this ITP shall control.

5. **ITP Time Frame Compliance:** Permittee shall fully implement and adhere to the conditions of this ITP within the time frames set forth below and as set forth in the Mitigation Monitoring and Reporting Program (MMRP), which is included as Attachment 1 to this ITP.

6. **General Provisions:**

   6.1. Designated Representative. Before starting Covered Activities, Permittee shall designate a representative (Designated Representative) responsible for communications with CDFW and overseeing compliance with this ITP. Permittee shall notify CDFW in writing before initiation of Covered Activities of the Designated Representative's name, business address, and contact information, and shall notify CDFW in writing if a substitute Designated Representative is selected or identified at any time during the term of this ITP.

   6.2. Designated Biologist(s) and Biological Monitor(s). Permittee shall submit to CDFW in writing the name, qualifications, business address, and contact information of the Designated Biologist(s) and Biological Monitor(s) using the Biologist Resume Form (Attachment 2) or another format containing the same information at least 30 days before starting Covered Activities. Permittee shall ensure that the Designated Biologist(s) and Biological Monitor(s) are knowledgeable and experienced in the biology, natural history, collecting, and handling of the Covered Species. The Designated Biologist(s) and Biological Monitor(s) shall be responsible for monitoring Covered Activities to help minimize and fully mitigate or avoid the incidental take of individual Covered Species and to minimize disturbance of Covered Species'

habitat. Permittee shall obtain CDFW approval of the Designated Biologist(s) and Biological Monitor(s) in writing before starting Covered Activities and shall also obtain approval in advance, in writing, if the Designated Biologist(s) or Biological Monitor(s) must be changed.

6.3. Designated Biologist Authority. To ensure compliance with the Conditions of Approval of this ITP, the Designated Biologist(s) shall immediately stop any activity that does not comply with this ITP and/or order any reasonable measure to avoid the unauthorized take of an individual of the Covered Species. Permittee shall provide unfettered access to the Project Area and otherwise facilitate the Designated Biologist(s) in the performance of their duties. If a Designated Biologist is unable to comply with the ITP, then the Designated Biologist shall notify the CDFW Representative immediately. Permittee shall not enter into any agreement or contract of any kind, including but not limited to non-disclosure agreements and confidentiality agreements, with its contractors and/or the Designated Biologist(s) and Biological Monitor(s), that prohibit or impede open communication with CDFW, including but not limited to providing CDFW staff with the results of any surveys, reports, or studies, or notifying CDFW of any non-compliance or take. Failure to notify CDFW of any non-compliance or take or injury of a Covered Species as a result of such agreement or contract may result in CDFW taking actions to prevent or remedy a violation of this ITP.

6.4. Education Program. Permittee shall conduct an in-person education program for all persons employed or otherwise working in the Project Area before performing any work. The program shall consist of a presentation from a Designated Biologist that includes a discussion of the biology and general behavior of the Covered Species, information about the distribution and habitat needs of the Covered Species, sensitivity of the Covered Species to human activities, its status pursuant to CESA including legal protection, recovery efforts, penalties for violations and Project-specific protective measures described in this ITP. Permittee shall prepare and distribute wallet-sized cards or a fact sheet handout containing this information for workers to carry in the Project Area. Permittee shall provide interpretation for non-English speaking workers, and the same instruction shall be provided to any new workers before they are authorized to perform work in the Project Area. Upon completion of the program, employees shall sign a form stating they attended the program and understand all protection measures. This training shall be repeated at least once annually for long-term and/or permanent employees that will be conducting work in the Project Area.

6.5. Construction Schedule. Permittee shall submit a final construction schedule showing Project phasing, commencement dates, and completion dates of Covered Activities to CDFW within 15 calendar days prior to the initiation of Covered Activities. During the Project construction period, Permittee shall notify CDFW of any major changes in construction schedule at least seven (7) days prior to the change being implemented.

6.6. Construction Monitoring Documentation. The Designated Biologist(s) and Biological Monitor(s) shall maintain construction-monitoring documentation on-site in either hard copy or digital format throughout the construction period, which shall include a copy of this ITP with attachments and a list of signatures of all personnel who have successfully completed the education program. Permittee shall ensure a copy of the construction-monitoring documentation is available for review at the Project Area upon request by CDFW.

6.7. Trash Abatement. Permittee shall initiate a trash abatement program before starting Covered Activities and shall continue the program for the duration of the Project. Permittee shall ensure that trash and food items are contained in animal-proof containers and removed, ideally at daily intervals but at least once a week, to avoid attracting opportunistic predators such as ravens, coyotes, and feral dogs.

6.8. Dust Control. Permittee shall implement dust control measures during Covered Activities to facilitate visibility for monitoring of the Covered Species by the Designated Biologist(s). Permittee shall keep the amount of water used to the minimum amount needed and shall not allow water to form puddles.

6.9. Erosion Control Materials. Permittee shall prohibit use of erosion control materials potentially harmful to Covered Species and other species, such as monofilament netting (erosion control matting) or similar material, in potential Covered Species' habitat.

6.10. Delineation of Property Boundaries. Before initiating any Covered Activities along each part of the route in active construction, Permittee shall clearly delineate the boundaries of the Project Area with fencing, stakes, or flags. Permittee shall restrict all Covered Activities to within the fenced, staked, or flagged areas. Permittee shall maintain all fencing, stakes, and flags until the completion of Covered Activities in that area.

6.11. Delineation of Habitat. Permittee shall clearly delineate habitat of the Covered Species within the Project Area with posted signs, posting stakes, flags, and/or rope or cord, and place fencing as necessary to minimize the disturbance of Covered Species' habitat.

6.12. Project Access. Project-related personnel shall access the Project Area using existing routes, and shall not cross Covered Species' habitat outside of or en route to the Project Area. Project access is limited to areas within the Project Area that are authorized for Covered Activities only. Permittee shall restrict Project-related vehicle traffic to established roads, staging, and parking areas. Permittee shall ensure that vehicle speeds do not exceed 15 miles per hour to avoid Covered Species on or traversing the roads. If Permittee determines construction of routes for travel is necessary within Covered Species' habitat within the Project Area and outside of established roadways and parking areas, the Designated Representative shall contact CDFW for written approval before carrying out such an activity. CDFW may

require an amendment to this ITP, among other reasons, if additional take of Covered Species will occur as a result of the Project modification.

6.13. Staging Areas. Permittee shall confine all Project-related parking, storage areas, laydown sites, equipment storage, and any other surface-disturbing activities to the Project Area using, to the extent possible, previously disturbed areas. Additionally, Permittee shall not use or cross Covered Species' habitat outside of the marked Project Area unless provided for as described in Condition of Approval 6.12 (Project Access) of this ITP.

6.14. Hazardous Waste. Permittee shall immediately stop and, pursuant to pertinent state and federal statutes and regulations, arrange for repair and clean up by qualified individuals of any fuel or hazardous waste leaks or spills at the time of occurrence, or as soon as it is safe to do so. Permittee shall exclude the storage and handling of hazardous materials from the Project Area and shall properly contain and dispose of any unused or leftover hazardous products off-site.

6.15. CDFW Access. Permittee shall provide CDFW staff with reasonable access to the Project and mitigation lands under Permittee control, and shall otherwise fully cooperate with CDFW efforts to verify compliance with or effectiveness of mitigation measures set forth in this ITP.

6.16. Refuse Removal. Upon completion of Covered Activities, Permittee shall remove from the Project Area and properly dispose of all temporary fill and construction refuse, including, but not limited to, broken equipment parts, wrapping material, cords, cables, wire, rope, strapping, twine, buckets, metal or plastic containers, and boxes.

6.17. Temporary Impact Criteria. For the purposes of this ITP, temporary impacts must meet the following criteria: (1) establishment and documentation of baseline conditions, including: absolute percentage of cover by plant species, vegetation heights, plant species composition, soil type, measure of soil compaction in each acre impacted, and small mammal burrow density per acre must be completed prior to any impacts occurring (see Condition of Approval 8.4 - Pre-Activity Documentation of Baseline Conditions), and (2) temporarily impacted areas must be restored to baseline conditions within 18 months of impacts occurring as a result of Covered Activities. Refer to Condition of Approval 9.2 (Restoration After Temporary Impacts) for restoration and monitoring requirements. Any area that does not meet these criteria that were categorized as temporary impacts shall be recategorized as long-term habitat conversion and the Permittee shall submit an amendment request to this ITP and provide additional compensatory mitigation.

6.18. Development Area Lighting. All lighting shall be designed so that exterior light fixtures are hooded, with lights directed downward or toward the area to be illuminated, with little to no horizontal spread, as low to the ground as feasible and so that backscatter to the nighttime sky is minimized. The design of the lighting will be such that the luminescence or light sources are shielded to prevent light trespass

outside the Development Area boundary and neither the lamp nor the reflector interior surface would be visible from outside the footprint of the Development Area except for public roadways. Only narrow spectrum bulbs shall be used to limit the range of species affected by lighting. All lighting shall be of minimum necessary brightness consistent for worker safety. The number of lighting fixtures on buildings and roadways shall be limited to the minimum required by the City of Antioch.

6.19. Roadside Curbs Design and Construction. Permittee shall provide CDFW with draft design plans for curbs on all roads, sidewalks and trails that will be installed as part of the Covered Activities at least 90 days prior to commencement of Covered Activities. Wherever possible, Permittee shall minimize the use of curbs or elevated margins that may serve as hard borders or separations between natural habitat and anthropogenic infrastructure. Curbs shall be designed to allow for volitional passage of the Covered Species. CDFW acceptance of the roadside curb designs shall be required prior to commencement of Covered Activities. CDFW shall provide written response to the Permittee within 30 calendar days of receipt of the curb designs. If no response is received from CDFW within 30 calendar days of submittal of the curb designs, the curb designs shall be considered as accepted by CDFW. Permittee shall construct roadside curbs according to the designs accepted by CDFW. The curb designs shall include, at minimum, the following design components:

6.19.1. Curbs on the edge of any road, sidewalk or trail shall be slanted at no more than a 45-degree angle. Alternatively, slanted sections shall be provided at regular intervals of no more than 100 linear feet. Private driveways shall not serve as slanted sections unless they are flush with the street. Examples of curb designs may be found online at: https://dot.ca.gov/-/media/dot-media/programs/design/documents/locked-2023-std-plans-dor-a11y.pdf (see Sheet A87A).

6.19.2. Curbs adjacent to storm drains shall be offset by a distance sufficient to allow volitional passage for the Covered Species around the storm drains.

6.20. Storm Water Infrastructure Designs and Construction. Permittee shall ensure that storm water-related infrastructure (e.g., storm drains, storm drain grates, v-ditches, catchment basins and detention basins) are designed and constructed in a manner that minimizes and avoids take of Covered Species to the maximum extent feasible. At least 90 days prior to commencement of Covered Activities, Permittee shall submit design plans and obtain written acceptance from CDFW confirming that the infrastructure incorporates design elements to avoid and reduce impacts to Covered Species prior to installation of such infrastructure to CDFW. CDFW shall provide written comments to Permittee within 30 calendar days of receipt of the storm drain designs. If no response is received from CDFW within 30 calendar days of submittal of the storm drain designs, the storm drain designs shall be considered accepted by CDFW. Permittee shall construct drop inlets or other storm drain infrastructure according to the designs accepted by CDFW.

6.20.1. Storm drain grates shall be offset from any adjacent curb by a distance that will allow for volitional passage of the Covered Species to go around the grate, along the curb.

6.20.2. Openings in storm drain grates shall be no more than 16 mm in width and shall be oriented perpendicular to the adjacent curb or walkway.

6.20.3. V-ditches shall be designed so that their walls do not form an angle greater than 45° with the substrate, and shall have velocity breaks at regular intervals that will allow for refuge and volitional escape by the Covered Species. V-ditches shall not direct or lead the Covered Species into hazardous or terminal (dead-end) areas.

6.20.4. Catchment basins shall be fitted with escape ramps or ladders that will allow the Covered Species to volitionally escape. Ramps and/or ladders shall be placed along a wall of the catchment basin and must span the distance from the lowest point in the basin (sump pit) to the grate covering.

6.20.5. Escape ramps or ladders shall be fashioned from perforated metal sheeting covered with an open structured synthetic matting material that will allow for sufficient traction for the Covered Species to volitionally escape from the catchment basin if entrained.

6.20.6. Alternatively, catchment basins shall be designed to have walls that are slanted outward and the walls shall be covered with open structured synthetic matting material together with an escape ramp or ladder that allows for volitional escape of the Covered Species.

6.20.7. Detention basins shall be designed with exclusion fencing to prevent access by the Covered Species. The exclusion fencing shall be solid or opaque for at least 15 vertical inches from where it meets the substrate, and may consist of plastic, metal or other impermeable material that serves to block sensory access by the Covered Species and reduce take that may arise from “pacing” or “giving up” behavior.

6.20.8. Vehicle entry/exit points of access to the detention basins shall have crossing structures installed (e.g., grated trenches) to prevent road mortality of the Covered Species.

6.20.9. Detention basin outfall structures shall have one-way gates installed (e.g., flapper gates) or similar devices that will serve to prevent the Covered Species from entering the basin via the structure.

7. Monitoring, Notification and Reporting Provisions:

7.1. Notification Before Commencement. The Designated Representative shall notify CDFW 14 calendar days before starting Covered Activities and shall document

compliance with all pre-Project Conditions of Approval before starting Covered Activities.

7.2. Notification of Non-compliance. The Designated Representative shall immediately notify CDFW if the Permittee is not in compliance with any Condition of Approval of this ITP, including but not limited to any actual or anticipated failure to implement measures within the time periods indicated in this ITP and/or the MMRP. The Designated Representative shall follow up within 24 hours with a written report to CDFW describing, in detail, any non-compliance with this ITP and suggested measures to remedy the situation.

7.3. Compliance Monitoring. The Designated Biologist(s) or Biological Monitor(s) shall be on-site daily whenever Covered Activities are occurring. The Designated Biologist(s) or Biological Monitor(s) shall conduct compliance inspections to:

(1) minimize incidental take of the Covered Species;

(2) prevent unlawful take of species;

(3) check for compliance with all measures of this ITP;

(4) obtain photo documentation of Project Area conditions;

(5) check all exclusion zones; and

(6) ensure that signs, stakes, and fencing are intact, and that Covered Activities are only occurring in the Project Area.

The Designated Representative or Designated Biologist(s) shall prepare daily written observation and inspection records summarizing oversight activities and compliance inspections, observations of Covered Species and their sign, survey results, dates of Covered Activity inactivity, and monitoring activities required by this ITP. Daily compliance inspections by the Designated Biologist or Biological Monitor may be reduced to a minimum of one day per week only for each phase of the Project after Permittee obtains written approval from CDFW per Condition of Approval 7.4 (Monthly Compliance Monitoring).

7.4. Monthly Compliance Monitoring. During periods of inactivity or after clearing, grubbing, and grading are completed and an exclusion fence is installed, compliance inspections by the Designated Biologist may be reduced to a minimum of one day per week only after Permittee obtains written approval from CDFW. Monthly monitoring forms shall be submitted to CDFW on a monthly basis to document information required in Condition of Approval 7.3 (Compliance Monitoring) and if the Covered Species was encountered, wildlife observations, and any other pertinent information. Daily compliance inspections shall resume if the Designated Biologist or CDFW finds the Permittee is out of compliance with any conditions of this ITP including the failure to maintain the exclusion fencing.

7.5. Monthly Compliance Report. The Designated Representative or Designated Biologist shall compile the observation and inspection records identified in Condition of Approval 7.3 (Compliance Monitoring) into a Monthly Compliance Report and submit it to CDFW along with a copy of the MMRP table with notes showing the current implementation status of each mitigation measure. Monthly Compliance Reports shall be submitted to the CDFW offices listed in the Notices section of this ITP and via e-mail to CDFW's Bay Delta Region Regional Representative and Headquarters CESA Program. At the time of this ITP's approval, the CDFW Regional Representative is Andrea Boertien (Andrea.Boertien@wildlife.ca.gov) and Headquarters CESA Program email is CESA@wildlife.ca.gov. CDFW may at any time increase the timing and number of compliance inspections and reports required under this provision depending upon the results of previous compliance inspections. If CDFW determines the reporting schedule must be changed, CDFW will notify Permittee in writing of the new reporting schedule.

7.6. Annual Status Report. Permittee shall provide CDFW with an Annual Status Report (ASR) no later than January 31 of every year beginning with issuance of this ITP and continuing until CDFW accepts the Final Mitigation Report identified below. Each ASR shall include, at a minimum: (1) a summary of all Monthly Compliance Reports for that year identified in Condition of Approval 7.5 (Monthly Compliance Report); (2) a general description of the status of the Project Area and Covered Activities, including actual or projected completion dates, if known; (3) a copy of the table in the MMRP with notes showing the current implementation status of each mitigation measure; (4) a monitoring report including revegetation success criteria for temporary impacts per Condition of Approval 9.2 (Restoration After Temporary Impacts), if the success criteria were met or not, and a mitigation proposal if success criteria were not met, (5) an assessment of the effectiveness of each completed or partially completed mitigation measure in avoiding, minimizing and mitigating Project impacts; (6) all available information about Project-related incidental take of the Covered Species; (7) an accounting of the number of acres subject to both temporary and permanent disturbance, both for the prior calendar year, and a total since ITP issuance; and (8) information about other Project impacts on the Covered Species.

7.7. CNDDB Observations. The Designated Biologist shall submit all observations of Covered Species to CDFW's California Natural Diversity Database (CNDDB) within 15 working days of the observation and the Designated Biologist shall include copies of the submitted forms with the next Monthly Compliance Report or ASR, whichever is submitted first relative to the observation.

7.8. Final Mitigation Report. No later than 45 days after completion of all mitigation measures, Permittee shall provide CDFW with a Final Mitigation Report. The Designated Biologist shall prepare the Final Mitigation Report which shall include, at a minimum: (1) a summary of all Monthly Compliance Reports and all ASRs; (2) a copy of the table in the MMRP with notes showing when each of the mitigation measures was implemented; (3) all available information about Project-related

incidental take of the Covered Species; (4) information about other Project impacts on the Covered Species; (5) beginning and ending dates of Covered Activities; (6) an assessment of the effectiveness of this ITP's Conditions of Approval in minimizing and fully mitigating Project impacts of the taking on Covered Species; (7) recommendations on how mitigation measures might be changed to more effectively minimize take and mitigate the impacts of future projects on the Covered Species; (8) summary of deceased wildlife; (9) photographs of pre- and post-construction results and; (10) as-built designs of the completed work; and (11) any other pertinent information.

7.9. Notification of Take or Injury. Permittee shall immediately notify the Designated Biologist(s) if a Covered Species is taken or injured by a Project-related activity, or if a Covered Species is otherwise found dead or injured within the vicinity of the Project. The Designated Biologist or Designated Representative shall provide immediate initial notification to the CDFW Regional Representative via e-mail and telephone, to discuss next steps. The initial notification to CDFW shall include information regarding the location, species, and number of animals taken or injured and the ITP Number. Following initial notification, Permittee shall send CDFW a written report within three (3) calendar days. The report shall include the date and time of the finding or incident, location of the animal or carcass, number of animals taken or injured, ITP Number, and if possible, provide a photograph, explanation as to cause of take or injury, and any other pertinent information. See Condition of Approval 8.17 (Covered Species Injury).

8. Take Minimization Measures: The following requirements are intended to ensure the minimization of incidental take of Covered Species in the Project Area during Covered Activities. Permittee shall implement and adhere to the following conditions to minimize take of Covered Species:

8.1. Seasonal Work Window Restriction. Covered Activities shall occur during the Covered Species non-breeding season, between June 15 and October 15. Covered Activities that occur within the creek and its associated riparian corridor shall only occur within the seasonal work window; the creek area and riparian corridor shall be protected with exclusion fencing. Clearing, grubbing, grading, and other Covered Activities outside of the creek and associated riparian corridor may occur year-round, within exclusion fencing, if Permittee provides clear documentation by October 15th annually, that 1) erosion control measures are in place per Condition of Approval 8.5 (Erosion Control) , and 2) temporary exclusion fencing (see Condition 8.15, Temporary Exclusion Barrier) is currently functional and has been continuously maintained throughout the term of the ITP.

Work may be authorized outside of the work period and extended on a weekly or day-to-day basis by CDFW. Permittee shall submit a written request for work period variance to CDFW Environmental Scientist Andrea Boertien, at Andrea.Boertien@wildlife.ca.gov. The work period variance request shall: (1) describe the extent of the work already completed; (2) detail the activities that

remain to be completed; (3) detail the time required to complete each of the remaining activities; (4) provide photographs of both the current work completed and the proposed site for continued work; and (5) include a National Weather Service 7-day forecast showing precipitation and nightly temperature lows for the variance period; and (6) include an assessment of additional biological impacts as a result of the work extension. An extension of the work period may require an Amendment if additional impacts to Covered Species will occur.

8.2. Daily Work Window Restriction. All Covered Activities shall terminate 30 minutes before sunset and shall not resume until 30 minutes after sunrise unless otherwise approved by the Designated Biologist. Permittee shall use sunrise and sunset times established by the U.S. Naval Observatory Astronomical Applications Department for the geographic area (https://gml.noaa.gov/grad/solcalc/) to identify when Covered Activities shall terminate and resume. All lighting shall be turned off 30 minutes prior to sunset, unless required for safety or security purposes.

8.3. Wet Weather Work Restriction. Work within the Project Area shall be restricted to periods of low rainfall (less than 0.1-inch per 24-hour period). Covered Activities shall cease and all associated erosion control measures shall be in place at least 12 hours prior to the onset of precipitation. No work shall occur during a precipitation event. Covered Activities halted due to precipitation may resume when precipitation ceases, the National Weather Service 72-hour weather forecast indicates a 30% or less chance of precipitation, and after a dry-out period of 48 hours for rain events (i.e., 0.25-inch within a 24-hour period).

8.4. Pre-Activity Documentation of Baseline Conditions. Prior to Covered Activities and any impacts, Permittee shall submit to CDFW documentation of baseline conditions of the areas subject to temporary disturbance within the Project Area. The baseline documentation shall include absolute percentages of vegetative cover by plant species, which shall be quantified by the Qualified Biologist or Biological Monitor prior to Covered Activities. It shall also include vegetation heights, plant species composition, soil type, measure of soil compaction in each acre impacted, and small mammal burrow density per acre. This baseline report shall contain reference photographs at static points within the Project Area to be used for comparison to assess if impacts were temporary.

8.4.1. Prior to commencement of Covered Activities, Permittee shall flag a minimum of six (6) vantage points that offer representative views of the Project Area, focusing on graded areas. Permittee shall photograph the areas from each of the flagged points, noting the direction and magnification of each photo. A reference key shall be submitted with the photos describing the location of the photo and the direction of the view.

8.5. Erosion Control. All erosion and sediment control measures shall be installed prior to implementing Covered Activities involving earth moving (e.g., grubbing, grading, excavation, trenching, backfilling, etc.). Permittee shall utilize erosion control

measures throughout all phases of the Project where sediment runoff from exposed slopes could leave the Project Area and/or enter a stream or pond. Permittee, Designated Biologist, Biological Monitor, or other trained staff shall monitor erosion control measures before, during, and after each storm event and repair and/or replace ineffective measures immediately.

8.6. No Project Phase without Erosion Control. No Project phase may be started if that phase and its associated erosion control measures cannot be completed prior to the onset of a storm event if that construction phase may cause the introduction of sediments into a drainage, stream, or pond. Permittee shall consult 72-hour weather forecasts from the National Weather Service prior to startup of any phase of the Project that may result in sediment runoff to the stream.

8.7. Geotextile and Monofilament Netting Restriction. To minimize the risk of ensnaring and strangling wildlife, Permittee shall not use erosion control materials containing synthetic (e.g., plastic or nylon) monofilament netting. Any geotextile material or filter fabric used within the Project Area shall not any contain petroleum-based products. Geotextiles, fiber rolls, and other erosion control measures shall be made of loose-weave mesh, such as jute, coconut (coir) fiber, or other products without welded or tight weaves.

8.8. Location of Spoil Sites. Spoil sites shall be placed away from concentrated ground squirrel, gopher, or other small mammal burrows and habitat features suitable for use by the Covered Species as refugia habitat. Spoil sites shall not be located where it may be washed back into a watercourse or within any potential Covered Species habitat throughout the Project Area.

8.9. Speed Limit. A speed limit of 15 miles per hour shall be observed within construction and staging areas, particularly on rainy or humid nights when CTS may be moving between their breeding ponds and upland habitat. Vehicles include, but are not limited to, tractors, excavators, skid-steers, personnel vehicles, pickup trucks, and dump trucks. This measure does not apply to vehicles utilizing public roads posted with speed limit signage.

8.10. Cease Operations Authority. The Designated Biologist or Biological Monitor shall have independent authority to stop any and all work if the Covered Species enters the active work area, if Project activities pose imminent threat to the Covered Species, or if Project activities are out of compliance with the measures outlined in this ITP. If the Covered Species is observed within the active Project Area, then all work shall halt and not continue until the Covered Species leaves the area on its own accord. The appropriate distance shall be determined by the Designated Biologist and/or Biological Monitor at the time of discovery. If the Covered Species does not move out of the active work area of its own accord, then it may be relocated per Condition of Approval 8.16 (Covered Species Relocation Plan).

If the Qualified Biologist or Biological Monitor witnesses a violation of this ITP, they shall contact CDFW immediately. Permittee shall not enter into non-disclosure

agreements with biological staff or otherwise implement penalties or disincentives restricting direct communication with CDFW. Failure to consult immediately with CDFW on violations shall constitute grounds for CDFW to revoke the Biologist's monitoring authority and require Permittee to stop work until another Biologist has been approved.

8.11. Open Trenches, Pits or Holes. Any open trenches, pits, holes or other excavations into which Covered Species may fall or become trapped shall either be covered, if feasible, or have wildlife escape ramps installed as determined by the Designated Biologist at the end of each workday. Prior to the initiation of Covered Activities each day and prior to the covering of trenches, holes or pits, the Designated Biologist or Biological Monitor shall inspect them for wildlife for movement out of harm's way.

8.12. Open Pipes Restriction. All pipes, culverts, or similar structures with a 4-inch or greater diameter that are stored on-site for one (1) or more overnight periods shall be securely capped on both ends prior to storage when feasible and thoroughly inspected for wildlife by the Designated Biologist or Construction Monitor prior to utilization. All hollow pipes or posts after they are installed as part of the Project and exposed to the environment shall be capped, screened, or filled with material by Permittee prior to the end of the day on which installation occurs.

8.13. Pre-Activity Covered Species Surveys. The Designated Biologist shall survey potential habitat features, such as aquatic and upland areas, including refugia such as under shrubs, downed logs, woody debris, burrows, ruts and holes near root structures, etc. for the Covered Species prior to and during all clearing, grubbing and site grading. The surveys shall be performed for each Project phase. If vegetation or fossorial mammal burrows become reestablished in a previously disturbed area, then the Designated Biologist shall resurvey these areas prior to conducting Covered Activities to ensure Covered Species are not in harm's way. If the Designated Biologist(s) or anyone else discovers the Covered Species, the Designated Biologist shall move the animal to a safe location nearby (e.g. the mouth of a ground squirrel burrow outside of the temporary exclusion barrier) as described in Condition of Approval 8.17 (Covered Species Relocation Plan).

8.14. Covered Species Avoidance. If a Covered Species is observed within the exclusion fencing or directly outside the fencing area at any point of the Project, all work within the immediate area (250 feet) shall immediately halt and all equipment shall be powered off and work shall not continue until a positive identification of the species is made by the Designated Biologist or a Biological Monitor with relevant training and professional experience with the Covered Species. If the Covered Species is discovered, CDFW shall be notified within one (1) to two (2) hours. The Covered Species may be relocated per Condition of Approval 8.17 (Covered Species Relocation Plan).

8.15. Temporary Exclusion Barrier. At least 30 days prior to the initiation of Covered Activities on each Project phase, the Permittee shall submit to CDFW for written

approval plans for an exclusion fencing system to block Covered Species from entering the work areas, and access routes as appropriate. If the Project is phased, the Permittee shall submit to CDFW for written approval plans for an exclusion fencing system, prior to the upcoming active phase. CDFW has 30 days to respond to each submission of plans, including resubmission of plans that are revised at the request of CDFW. The plans shall include a map indicating location of exclusion fencing in relation to the Project Area, the Project phase that will be constructed (if applicable), location of Covered Species habitat features, dimension specifications, and a description of fencing materials. Permittee shall be responsible for implementation and upkeep of the fencing system. In addition, the following criteria for the exclusion fencing system shall be met:

8.15.1. If the initial site grading is not completed over the entire Project Area prior to the end of the first construction season per Condition of Approval 8.1 (Seasonal Work Window Restriction), then the temporary exclusion barrier shall be installed between any ungraded portions of the Project Area and the graded portions of the Project Area. The temporary barrier may be adjusted as Covered Activities continue as described in Condition of Approval 8.14 (Temporary Exclusion Barrier), if approved by CDFW.

8.15.2. The exclusion fencing shall consist of material appropriate for exclusion of Covered Species.

8.15.3. The exclusion fencing shall either measure at least 36 inches tall above the soil surface or be of an appropriate height for exclusion of the Covered Species.

8.15.4. The Designated Biologist, Biological Monitor, or trained Construction Monitor shall inspect the fencing and gates immediately after every rain event to ensure it maintains structural integrity. Holes or burrows which appear to extend under the fencing will be blocked inside the fence line to prevent the Covered Species from accessing work areas.

8.15.5. The bottom of the exclusion fencing shall not allow wildlife to pass through gaps or holes with the bottom of the fencing buried six inches below grade.

8.15.6. The exclusion fencing shall be taut between the supporting stakes and shall have the supporting stakes oriented on the inside edge towards the development areas.

8.15.7. The exclusion fencing shall feature coverboards inside and outside the perimeter placed at 100-foot intervals and one-way escape doors or an appropriate design for preventing Covered Species and wildlife from being trapped.

8.15.8. Gates in exclusion fencing must be maintained such that they remain closed when vehicles or personnel are not moving through them, and they must be

DocuSign Envelope ID: A02FC8C4-93F1-485A-825A-27F65F9A227E

maintained in good repair. Gates shall be repaired immediately upon discovery of damage.

8.15.9. The fencing and coverboards shall be inspected every morning for trapped Covered Species for the Project's duration. Any trapped wildlife found in the Project Area under a cover board or along the fencing will be photographed and reported immediately to the Designated Biologist. If the Designated Biologist determines that the trapped wildlife is the Covered Species, they shall temporarily stop all Covered Activities that threaten harm and notify CDFW immediately. During periods when the Covered Species is likely to be migrating above-ground, the daily fence check will be conducted by the Designated Biologist or Biological Monitor. These daily inspection periods by the Designated Biologist include the period from the first major rain event of the season that produces 0.2-inch of precipitation or greater through March 15 when Covered Species adults are likely to be migrating from subterranean refugia to breeding ponds and back to their refugia, and again from May 1 through August 31 when metamorphs are dispersing from their natal ponds, and any time of the year on mornings following any rain event greater than 0.1 inch, when adults may be migrating to their breeding ponds. If a California tiger salamander is encountered during these inspections, and is in danger of being harmed, then the Designated Biologist shall temporarily stop all activities that threaten harm, remove the animal from the area, and relocate it to the pre-approved location as described in the Covered Species Relocation Plan (Condition of Approval 8.17).

8.15.10. If fencing becomes damaged, it will be immediately repaired upon detection and the Designated Biologist or Biological Monitor shall stop work in the vicinity of the fencing as needed to ensure that no California tiger salamanders have entered the construction area.

8.15.11. Fencing system entry/exit points for vehicular and pedestrian traffic shall be constructed so wildlife cannot access the area under active construction during non-work hours.

8.15.12. The Designated Biologist shall inspect the Project Area prior to installation of the exclusion fencing. The exclusion fencing system shall remain in place until all Covered Activities have been completed. All components of the exclusion fencing will be removed for storage or disposal off-site immediately upon completion of Covered Activities. All vegetation slated for removal in the exclusion fencing buffer area shall be inspected by a Designated Biologist prior to the initiation of removal. Exclusion fencing shall be inspected daily by the Designated Biologist, Biological Monitor, or trained Construction Monitor and repaired as necessary, including inspection of coverboards and replacement of wetted sponges as necessary to minimize wildlife distress.

8.16. Handling of California Tiger Salamanders. The Covered Species shall be handled and assessed according to The Declining Amphibian Task Force Fieldwork Code of Practice available online at: https://www.fws.gov/media/declining-amphibian-task-force-fieldwork-code-practice.

8.17. Covered Species Relocation Plan. Permittee shall develop a Relocation Plan for CTS and submit it to CDFW for review and written approval prior to ground-disturbing activities occurring within 1.3 miles of known CTS breeding pools or in suitable upland habitat.

At minimum, the Covered Species Relocation Plan shall meet the following requirements:

8.17.1. Detailed descriptions of capture, handling, and relocation methods;

8.17.2. Quantification of the amount, relative location, and quality of suitable habitat (e.g., breeding, upland, and dispersal habitat) in areas proposed for relocations, including information on invasive and non-native species present, available upland burrows, and potential barriers to movement;

8.17.3. Identification of locations to which individuals will be relocated, preferably no more than 300 feet outside of the Project Area unless otherwise approved by CDFW in writing, and approval of locations by CDFW prior to the start of Covered Activities;

8.17.4. Documentation of proposed relocation sites by photographs and GPS positions;

8.17.5. Measurement (Snout-Vent) and photography of Covered Species for identification purposes prior to relocation;

8.17.6. Monitoring of the Covered Species until it is determined by the Designated Biologist that it is not imperiled by predators or other dangers;

8.17.7. Relocations shall not be proposed to where non-native tiger salamanders or hybrids are known to exist within the maximum California tiger salamander dispersal distance (i.e., ≤ 1.3 miles); and

8.17.8. Documentation of Covered Species relocations shall be provided to the CDFW Representative within 24 hours of Covered Species Relocation.

8.18. Covered Species Injury. If a Covered Species is injured as a result of Project-related activities, the Designated Biologist shall immediately take it to a CDFW approved wildlife rehabilitation or veterinary facility. Permittee shall identify the facility before starting Covered Activities. Permittee shall bear any costs associated with the care or treatment of such injured Covered Species. The Permittee shall notify CDFW of the injury to the Covered Species immediately by telephone and e-mail followed by a

written incident report as described in Condition of Approval 7.9 (Notification of Take or Injury). Notification shall include the name of the facility where the animal was taken.

8.19. Augering and Excavation Surveys. The Designated Biologist shall survey all augering and excavation soils material originating from up to 6-feet below grade in potential Covered Species habitat. The Permittee shall ensure auger bits are cleaned by shaking the soil loose and not cleaned by spinning. The Permittee shall ensure excavation is coordinated with the Designated Biologist to allow sufficient time to survey the excavated soil.

8.20. Use of Rodenticide and Poison. At no time during the life of the Project shall rodenticides or other poisons used in the control of burrowing animals be used by Permittee on the Project Area or mitigation site.

9. Habitat Management Land Acquisition and Restoration: CDFW has determined that permanent protection and perpetual management of compensatory habitat is necessary and required pursuant to CESA to fully mitigate Project-related impacts of the taking on the Covered Species that will result from implementation of the Covered Activities. This determination is based on factors including an assessment of the importance of the habitat in the Project Area, the extent to which the Covered Activities will impact the habitat, and CDFW's estimate of the protected acreage required to provide for adequate compensation.

To meet this requirement, the Permittee shall either purchase 144.5 acres of Covered Species credits from a CDFW-approved mitigation or conservation bank pursuant to Condition of Approval 9.3 (Covered Species Credits) below OR shall provide for both the permanent protection and management of 144.5 acres of Habitat Management (HM) lands pursuant to Condition of Approval 9.4 (Habitat Management Lands Acquisition and Protection) below and the calculation and deposit of the management funds pursuant to Condition of Approval 9.5 (Endowment Fund) below. Purchase of Covered Species credits OR permanent protection and funding for perpetual management of HM lands must be complete before starting Covered Activities, or within 30 months of the effective date of this ITP if Security is provided pursuant to Condition of Approval 10 (Security) below for all uncompleted obligations. The Permittee shall also restore on-site 11 acres of temporarily impacted Covered Species habitat pursuant to Condition of Approval 9.2 (Restoration after Temporary Impacts) below.

9.1. Cost Estimates. For the purposes of determining the Security amount, CDFW has estimated the cost sufficient for CDFW or its contractors to complete acquisition, protection, and perpetual management of the HM lands and restoration of temporarily disturbed habitat as follows:

9.1.1. Land acquisition costs for HM lands identified in Condition of Approval 9.4 (Habitat Management Lands Acquisition and Protection) below, estimated at $25,000/acre for 144.5 acres: **$3,612,500.00** Land acquisitions costs are

estimated using local fair market current value per acre for lands with habitat values meeting mitigation requirements;

9.1.2. Start-up costs for HM lands, including initial site protection and enhancement costs as described in Condition of Approval 9.4.6 (Start-Up Activities) below, estimated at **$177,392.00**.

9.1.3. Interim management period funding as described in Condition of Approval 9.4.7 (Interim Management (Initial and Capital)) below, estimated at **$405,100**;

9.1.4. Long-term management funding as described in Condition of Approval 9.5 (Endowment Fund) below, estimated at $7,106.37 per acre for 144.5 acres: **$1,026,870**. Long-term management funding is estimated initially for the purpose of providing Security to ensure implementation of HM lands management.

9.1.5. Related transaction fees including but not limited to account set-up fees, administrative fees, title and documentation review and related title transactions, expenses incurred from other state agency reviews, and overhead related to transfer of HM lands to CDFW as described in Condition of Approval 9.6 (Reimburse CDFW), estimated at **$3,000**.

9.1.6. Restoration of on-site temporary effects to Covered Species habitat as described in Conditions of Approval 6.17 (Temporary Impact Criteria) and 9.2 (Restoration after Temporary Impacts), calculated at $15,000/acre for 11 acres: **$165,000.**

9.1.7. All costs associated with CDFW engaging an outside contractor to complete the mitigation tasks, including but not limited to acquisition, protection, and perpetual funding and management of the HM lands and restoration of temporarily disturbed habitat. These costs include but are not limited to the cost of issuing a request for proposals, transaction costs, contract administration costs, and costs associated with monitoring the contractor's work **$40,000.00.**

9.2. Restoration After Temporary Impacts. All soils exposed or disturbed as a result of Covered Activities shall be revegetated with native plants or seeded with an erosion control seed mix containing native forbs, shrubs, wildflowers, and grasses. Revegetation shall be completed as soon as possible after earthmoving activities cease each construction season; however, plantings shall be most successful if done during the rainy season. Seeding placed after October 15 shall be applied by hydroseed or shall be covered with broadcast straw, jute netting, coconut fiber blanket, light mulch, or a similar erosion control method. Any soils imported to the site for fill shall have similar chemical properties, drainage characteristics and composition to native soils. All imported soils must be free of weeds, weed seeds, and pathogens.

9.2.1. Vegetation cover shall consist of less than 5% cover of invasive plant species rated as “high” by the Cal-IPC at the end of one (1) year.

9.2.2. Absolute ground cover of naturalized and non-native annual grassland plant species shall be a minimum of 80% at the end of one (1) year.

9.2.3. If the survival and/or cover requirements are not meeting these goals, Permittee is responsible for replacement planting, additional watering, weeding, invasive exotic eradication, or any other practice to achieve these requirements over subsequent years until the success criteria is reached. Replacement plants shall be monitored with the same survival and growth requirements as during the initial monitoring period.

9.3. Covered Species Credits. If the Permittee elects to purchase Covered Species credits to complete compensatory mitigation obligations, then Permittee shall purchase 144.5 acres of Covered Species credits from a CDFW-approved mitigation or conservation bank prior to initiating Covered Activities, or no later than 30 months from the issuance of this ITP if Security is provided pursuant to Condition of Approval 10 below. Prior to purchase of Covered Species credits, Permittee shall obtain CDFW approval to ensure the mitigation or conservation bank is appropriate to compensate for the impacts of the Project. Permittee shall submit to CDFW a copy of the Bill of Sale(s) and Payment Receipt prior to initiating Covered Activities or within 30 months from issuance of this ITP if Security is provided.

9.4. Habitat Management Lands Acquisition and Protection. If the Permittee elects to provide for the acquisition, permanent protection, and perpetual management of HM lands to complete compensatory mitigation obligations, then the Permittee shall complete the following:

9.4.1. Fee Title. Transfer fee title of the HM lands to CDFW pursuant to terms approved in writing by CDFW. Alternatively, CDFW, in its sole discretion, may authorize a governmental entity, special district, non-profit organization, for-profit entity, person, or another entity to hold title to and manage the property provided that the district, organization, entity, or person meets the requirements of Government Code sections 65965-65968, as amended.

9.4.2. Conservation Easement. If CDFW does not hold fee title to the HM lands, CDFW shall act as grantee for a conservation easement over the HM lands or shall, in its sole discretion, approve a non-profit entity, public agency, or Native American tribe to act as grantee for a conservation easement over the HM lands provided that the entity, agency, or tribe meets the requirements of Civil Code section 815.3. If CDFW elects not to be named as the grantee for the conservation easement, CDFW shall be expressly named in the conservation easement as a third-party beneficiary. The Permittee shall obtain CDFW written approval of any conservation easement before its execution or recordation. No conservation easement shall be approved by CDFW unless it complies with Civil Code sections 815-816, as

amended, and Government Code sections 65965-65968, as amended and includes provisions expressly addressing Government Code sections 65966(j) and 65967(e). Because the "doctrine of merger" could invalidate the conservation interest, under no circumstances can the fee title owner of the HM lands serve as grantee for the conservation easement.

9.4.3. HM Lands Approval. Obtain CDFW written approval of the HM lands before acquisition and/or transfer of the land by submitting, at least three months before acquisition and/or transfer of the HM lands, documentation identifying the land to be purchased or property interest conveyed to an approved entity as mitigation for the Project's impacts on Covered Species;

9.4.4. HM Lands Documentation. Provide a recent preliminary title report, Phase I Environmental Site Assessment, and other necessary documents (please contact CDFW for document list). All documents conveying the HM lands and all conditions of title are subject to the approval of CDFW, and if applicable, the Wildlife Conservation Board and the Department of General Services;

9.4.5. Land Manager. Designate both an interim and long-term land manager approved by CDFW. The interim and long-term land managers may, but need not, be the same. The interim and/or long-term land managers may be the landowner or another party. Documents related to land management shall identify both the interim and long-term land managers. Permittee shall notify CDFW of any subsequent changes in the land manager within 30 days of the change. If CDFW will hold fee title to the mitigation land, CDFW will also act as both the interim and long-term land manager unless otherwise specified. The grantee for the conservation easement cannot serve as the interim or long-term manager without the express written authorization of CDFW in its sole discretion.

9.4.6. Start-up Activities. Provide for the implementation of start-up activities, including the initial site protection and enhancement of HM lands, once the HM lands have been approved by CDFW. Start-up activities include, at a minimum: (1) preparing a final management plan for CDFW approval (see https://nrm.dfg.ca.gov/FileHandler.ashx?DocumentID=137386&inline); (2) conducting a baseline biological assessment and land survey report within four months of recording or transfer, this assessment is separate from any baseline reports required for CDFW evaluation of HM Lands proposals; (3) developing and transferring Geographic Information Systems (GIS) data if applicable; (4) establishing initial fencing; (5) conducting litter removal; (6) conducting initial habitat restoration or enhancement, if applicable; and (7) installing signage;

9.4.7. Interim Management (Initial and Capital). Provide for the interim management of the HM lands. The Permittee shall ensure that the interim

land manager implements the interim management of the HM lands as described in the final management plan and conservation easement approved by CDFW. The interim management period shall be a minimum of three years from the date of HM land acquisition and protection and full funding of the Endowment and includes expected management following start-up activities. Interim management period activities described in the final management plan shall include fence repair, continuing trash removal, site monitoring, vegetation and invasive species management, and monitoring reports.

Permittee shall either (1) provide Security to CDFW for the minimum of three years of interim management that the land owner, Permittee, or land manager agrees to manage and pay for at their own expense, (2) establish an escrow account with written instructions approved in advance in writing by CDFW to pay the land manager annually in advance, or (3) establish a short-term enhancement account with CDFW or a CDFW-approved entity for payment to the land manager.

9.5. Endowment Fund. If the Permittee elects to provide for the acquisition, permanent protection, and perpetual management of HM lands to complete compensatory mitigation obligations, then the Permittee shall ensure that the HM lands are perpetually managed, maintained, and monitored by the long-term land manager as described in this ITP, the conservation easement, and the final management plan approved by CDFW. After obtaining CDFW approval of the HM lands, Permittee shall provide long-term management funding for the perpetual management of the HM lands by establishing a long-term management fund (Endowment). The Endowment is a sum of money, held in a CDFW-approved fund that is permanently restricted to paying the costs of 1) long-term management and 2) stewardship of the mitigation property for which the funds were set aside, which costs include the perpetual management, maintenance, monitoring, and other activities on the HM lands consistent with this ITP, the conservation easement, and the management plan required by Condition of Approval 9.4.5 (Land Manager). Endowment as used in this ITP shall refer to the endowment deposit and all interest, dividends, other earnings, additions and appreciation thereon. The Endowment shall be governed by this ITP, Government Code sections 65965-65968, as amended, and Probate Code sections 18501-18510, as amended.

After the interim management period, Permittee shall ensure that the designated long-term land manager implements the management and monitoring of the HM lands according to the final management plan. The long-term land manager shall be obligated to manage and monitor the HM lands in perpetuity to preserve their conservation values in accordance with this ITP, the conservation easement, and the final management plan. Such activities shall be funded through the Endowment.

9.5.1. Identify an Endowment Manager. The Endowment shall be held by the Endowment Manager, which shall be either CDFW or another entity

qualified pursuant to Government Code sections 65965-65968, as amended.

Permittee shall submit to CDFW a written proposal that includes: (i) the name of the proposed Endowment Manager; (ii) whether the proposed Endowment Manager is a governmental entity, special district, nonprofit organization, community foundation, or congressionally chartered foundation; (iii) whether the proposed Endowment Manager holds the property or an interest in the property for conservation purposes as required by Government Code section 65968(b)(1) or, in the alternative, the basis for finding that the Project qualifies for an exception pursuant to Government Code section 65968(b)(2); and (iv) a copy of the proposed Endowment Manager's certification pursuant to Government Code section 65968(e).

Within thirty (30) days of CDFW's receipt of Permittee's written proposal, CDFW shall inform Permittee in writing if it determines the proposal does not satisfy the requirements of Fish and Game Code section 2081(b)(3) and, if so, shall provide Permittee with a written explanation of the reasons for its determination. If CDFW does not provide Permittee with a written determination within the thirty-day period, the proposal shall be deemed consistent with Section 2081(b)(3).

9.5.2. Calculate the Endowment Funds Deposit. After obtaining CDFW written approval of the HM lands, long-term management plan, and Endowment Manager, Permittee shall prepare an endowment assessment (equivalent to a Property Analysis Record (PAR)) to calculate the amount of funding necessary to ensure the long-term management of the HM lands (Endowment Deposit Amount). Note that the endowment for the easement holder should not be included in this calculation. The Permittee shall submit to CDFW for review and approval the results of the endowment assessment before transferring funds to the Endowment Manager.

9.5.2.1. Capitalization Rate and Fees. Permittee shall obtain the capitalization rate from the selected Endowment Manager for use in calculating the endowment assessment and adjust for any additional administrative, periodic, or annual fees.

9.5.2.2. Endowment Buffers/Assumptions. Permittee shall include in the endowment assessment assumptions the following buffers for endowment establishment and use that will substantially ensure long-term viability and security of the Endowment:

9.5.2.2.1. 10 Percent Contingency. A 10 percent contingency shall be added to each endowment calculation to hedge against underestimation of the fund, unanticipated expenditures, inflation, or catastrophic events.

9.5.2.2.2. Three Years Delayed Spending. The endowment shall be established assuming spending will not occur for the first three years after full funding.

9.5.2.2.3. Non-Annualized Expenses. For all large capital expenses to occur periodically but not annually such as fence replacement or well replacement, payments shall be withheld from the annual disbursement until the year of anticipated need or upon request to Endowment Manager and CDFW.

9.5.3. Transfer Long-term Endowment Funds. Permittee shall transfer the long-term endowment funds to the Endowment Manager upon CDFW approval of the Endowment Deposit Amount identified above.

9.5.4. Management of the Endowment. The approved Endowment Manager may pool the Endowment with other endowments for the operation, management, and protection of HM lands for local populations of the Covered Species but shall maintain separate accounting for each Endowment. The Endowment Manager shall, at all times, hold and manage the Endowment in compliance with this ITP, Government Code sections 65965-65968, as amended, and Probate Code sections 18501-18510, as amended.

Notwithstanding Probate Code sections 18501-18510, the Endowment Manager shall not make any disbursement from the Endowment that will result in expenditure of any portion of the principal of the endowment without the prior written approval of CDFW in its sole discretion. Permittee shall ensure that this requirement is included in any agreement of any kind governing the holding, investment, management, and/or disbursement of the Endowment funds.

Notwithstanding Probate Code sections 18501-18510, if CDFW determines in its sole discretion that an expenditure needs to be made from the Endowment to preserve the conservation values of the HM lands, the Endowment Manager shall process that expenditure in accordance with directions from CDFW. The Endowment Manager shall not be liable for any shortfall in the Endowment resulting from CDFW's decision to make such an expenditure.

9.6. Reimburse CDFW. Permittee shall reimburse CDFW for all reasonable costs incurred by CDFW related to issuance and monitoring of this ITP, including, but not limited to transaction fees, account set-up fees, administrative fees, title and documentation review and related title transactions, costs incurred from other state agency reviews, and overhead related to transfer of HM lands to CDFW.

10. Security: The Permittee may proceed with Covered Activities only after the Permittee has ensured funding (Security) to complete any activity required by Condition of Approval 9

(Habitat Management Land Acquisition and Restoration) that has not been completed before Covered Activities begin. Permittee shall provide Security as follows:

10.1. Security Amount. The Security shall be in the amount of **$5,429,862.00**[5] or in the amount identified in 9.1[5] (Cost Estimates) specific to the obligation that has not been completed. This amount[5] is determined by CDFW based on the cost estimates identified in Condition of Approval 9.1[5] (Cost Estimates) above, sufficient for CDFW or its contractors to complete land acquisition, property enhancement, startup costs, initial management, long-term management, and monitoring.[5]

10.2. Security Form. The Security shall be in the form of an irrevocable letter of credit (see Attachment 3) or another form of Security approved in advance in writing by CDFW's Office of the General Counsel.

10.3. Security Timeline. The Security shall be provided to CDFW for review and approval at least 90 days before Covered Activities begin. The Security shall be provided to CDFW at least 30 days before Covered Activities begin.

10.4. Security Holder. The Security shall be held by CDFW or in a manner approved in advance in writing by CDFW.

10.5. Security Transmittal. Permittee shall transmit it to CDFW with a completed Mitigation Payment Transmittal Form (see Attachment 4) or by way of an approved instrument such as an escrow agreement, irrevocable letter of credit, or other.

10.6. Security Drawing. The Security shall allow CDFW to draw on the principal sum if CDFW, in its sole discretion, determines that the Permittee has failed to comply with the Conditions of Approval of this ITP.

10.7. Security Release. The Security (or any portion of the Security then remaining) shall be released to the Permittee after CDFW has conducted an on-site inspection and received confirmation that all secured requirements have been satisfied, as evidenced by:

For Credit Purchase:

- Copy of Bill of Sale(s) and Payment Receipt(s) or Credit Transfer Agreement for the purchase of Covered Species credits; and

[5]*If security is provided after December 31, 2023 then security dollar amounts shall be adjusted for inflation based on 1) U.S. Federal Housing Finance Agency, All-Transactions House Price Index for Oakland-Berkeley-Livermore, CA (MSAD) [ATNHPIUS36084Q], for land acquisition costs, available online at: https://fred.stlouisfed.org/series/ATNHPIUS36084Q using the published value for (continue footnote on page 28) January 2024 as the base price index through to the most recent published value at the time security is provided to CDFW for review and approval, and; 2) U.S. Bureau of Labor Statistics, Consumer Price Index for All Urban Consumers: All Items in U.S. City Average [CPIAUCSL], available online at https://fred.stlouisfed.org/series/CPIAUSCL for non-land acquisition item costs using the published value for January 2024 at the base price index to the most recent published value at the time the security is submitted for CDFW review and approval.

- Timely submission of all required reports.

AND/OR:

For Habitat Management Land Acquisition (HMLA):

- Written documentation of the acquisition of the HM lands;
- Copies of all executed and recorded conservation easements;
- Written confirmation from the approved Endowment Manager of its receipt of the full Endowment; and
- Timely submission of all required reports.

Even if Security is provided, the Permittee must complete the required acquisition, protection and transfer of all HM lands and record any required conservation easements no later than 30 months from the effective date of this ITP. CDFW may require the Permittee to provide additional HM lands and/or additional funding to ensure the impacts of the taking are minimized and fully mitigated, as required by law, if the Permittee does not complete these requirements within the specified timeframe.

IX. Amendment:

This ITP may be amended as provided by California Code of Regulations, Title 14, section 783.6, subdivision (c), and other applicable law. This ITP may be amended without the concurrence of the Permittee as required by law, including if CDFW determines that continued implementation of the Project as authorized under this ITP would jeopardize the continued existence of the Covered Species or where Project changes or changed biological conditions necessitate an ITP amendment to ensure that all Project-related impacts of the taking to the Covered Species are minimized and fully mitigated.

X. Stop-Work Order:

If CDFW determines the Permittee has violated any term or condition of this ITP or has engaged in unlawful take, CDFW may issue Permittee a written stop-work order instructing the Permittee to suspend any Covered Activity for an initial period of up to 30 days or risk suspension or revocation of this ITP. CDFW can issue a stop-work order to prevent or remedy a violation of this ITP, including but not limited to the failure to comply with reporting or monitoring obligations, or to prevent the unauthorized take of any CESA endangered, threatened, or candidate species, regardless of whether that species is a Covered Species under this ITP. Permittee shall stop work immediately as directed by CDFW upon receipt of any such stop-work order. Upon written notice to Permittee, CDFW may extend any stop-work order issued to Permittee for a period not to exceed 30 additional days.

If Permittee fails to remedy the violation or to comply with a stop-work order, CDFW may proceed with suspension and revocation of this ITP. Suspension and revocation of this ITP

shall be governed by California Code of Regulations, Title 14, section 783.7, and any other applicable law. Neither the Designated Biologist nor CDFW shall be liable for any costs incurred in complying with stop-work orders.

XI. Compliance with Other Laws:

This ITP sets forth CDFW's requirements for the Permittee to implement the Project pursuant to CESA. This ITP does not necessarily create an entitlement to proceed with the Project. Permittee is responsible for complying with all other applicable federal, state, and local law.

XII. Notices:

The Permittee shall sign and return this ITP to CDFW. A manual or digital signature is acceptable, provided a digital signature complies with Government Code section 16.5. Digital signatures facilitated by CDFW will be automatically returned. Manual (wet) signatures on duplicate original paper copies shall be returned by the Permittee via registered first-class mail or overnight delivery to the following address:

Habitat Conservation Planning Branch
California Department of Fish and Wildlife
Attention: CESA Permitting Program
Post Office Box 944209
Sacramento, CA 94244-2090

Written notices, reports and other communications relating to this ITP shall be delivered to CDFW by email or registered first class mail at the following address, or at addresses CDFW may subsequently provide the Permittee. Notices, reports, and other communications shall reference the Project name, Permittee, and ITP Number (2081-2021-097-03) in a cover letter and on any other associated documents.

Original cover with attachment(s) to:

Erin Chappell, Regional Manager
California Department of Fish and Wildlife – Bay Delta Region
2825 Cordelia Road, Suite 100
Fairfield, CA 94534
R3CESA@wildlife.ca.gov

and a copy to:

Habitat Conservation Planning Branch
California Department of Fish and Wildlife
Attention: CESA Permitting Program
Post Office Box 944209
Sacramento, CA 94244-2090
CESA@wildlife.ca.gov

Unless Permittee is notified otherwise, CDFW's Regional Representative for purposes of addressing issues that arise during implementation of this ITP is:

Andrea Boertien
California Department of Fish and Wildlife – Bay Delta Region
2825 Cordelia Road, Suite 100
Fairfield, CA 94534
Telephone (707) 317-0388
Andrea.Boertien@wildlife.ca.gov

XIII. Compliance with the California Environmental Quality Act:

CDFW's issuance of this ITP is subject to CEQA. CDFW is a responsible agency pursuant to CEQA with respect to this ITP because of prior environmental review of the Project by the lead agency, City of Antioch. (See generally Pub. Resources Code, §§ 21067, 21069.) The lead agency's prior environmental review of the Project is set forth in the Creekside/Vineyards at Sand Creek Project, (SCH No.: 2020039044) dated September 2020 that the City of Antioch certified for Creekside/Vineyards at Sand Creek Project on April 14, 2021. At the time the lead agency certified the EIR and approved the Project, it also adopted various mitigation measures for the Covered Species as conditions of Project approval.

This ITP, along with CDFW's related CEQA findings, which are available as a separate document, provide evidence of CDFW's consideration of the lead agency's EIR for the Project and the environmental effects related to issuance of this ITP (CEQA Guidelines, § 15096, subd. (f)). CDFW finds that issuance of this ITP will not result in any previously undisclosed potentially significant effects on the environment or a substantial increase in the severity of any potentially significant environmental effects previously disclosed by the lead agency. Furthermore, to the extent the potential for such effects exists, CDFW finds adherence to and implementation of the Conditions of Project Approval adopted by the lead agency, and that adherence to and implementation of the Conditions of Approval imposed by CDFW through the issuance of this ITP, will avoid or reduce to below a level of significance any such potential effects. CDFW consequently finds that issuance of this ITP will not result in any significant, adverse impacts on the environment.

XIV. Findings Pursuant to CESA:

These findings are intended to document CDFW's compliance with the specific findings requirements set forth in CESA and related regulations (Fish & G. Code § 2081, subs. (b)-(c); Cal. Code Regs., tit. 14, §§ 783.4, subds, (a)-(b), 783.5, subd. (c)(2)).

CDFW finds based on substantial evidence in the ITP application, Creekside/Vineyards at Sand Creek Project, the results of site visits and consultations, and the administrative record of proceedings, that issuance of this ITP complies and is consistent with the criteria governing the issuance of ITPs pursuant to CESA:

(1) Take of Covered Species as defined in this ITP will be incidental to the otherwise lawful activities covered under this ITP;

(2) Impacts of the taking on Covered Species will be minimized and fully mitigated through the implementation of measures required by this ITP and as described in the MMRP. Measures include: (1) permanent habitat protection; (2) establishment of avoidance zones; (3) worker education; and (4) Monthly Compliance Reports. CDFW evaluated factors including an assessment of the importance of the habitat in the Project Area, the extent to which the Covered Activities will impact the habitat, and CDFW's estimate of the acreage required to provide for adequate compensation. Based on this evaluation, CDFW determined that the protection and management in perpetuity of 144.5 acres of compensatory habitat that is contiguous with other protected Covered Species habitat and/or is of higher quality than the habitat being destroyed by the Project, along with the minimization, monitoring, reporting, and funding requirements of this ITP minimizes and fully mitigates the impacts of the taking caused by the Project;

(3) The take avoidance and mitigation measures required pursuant to the conditions of this ITP and its attachments are roughly proportional in extent to the impacts of the taking authorized by this ITP;

(4) The measures required by this ITP maintain Permittee's objectives to the greatest extent possible;

(5) All required measures are capable of successful implementation;

(6) This ITP is consistent with any regulations adopted pursuant to Fish and Game Code sections 2112 and 2114;

(7) Permittee has ensured adequate funding to implement the measures required by this ITP as well as for monitoring compliance with, and the effectiveness of, those measures for the Project; and

(8) Issuance of this ITP will not jeopardize the continued existence of the Covered Species based on the best scientific and other information reasonably available, and this finding includes consideration of the species' capability to survive and reproduce, and any adverse impacts of the taking on those abilities in light of (1) known population trends; (2) known threats to the species; and (3) reasonably foreseeable impacts on the species from other related projects and activities. Moreover, CDFW's finding is based, in part, on CDFW's express authority to amend the terms and conditions of this ITP without concurrence of the Permittee as necessary to avoid jeopardy and as required by law.

XV. Attachments:

FIGURE 1	Project Site Location Map
FIGURE 2	Project Site Impacts Overview
FIGURE 3	Overview and Engineering Designs

ATTACHMENT 1	Mitigation Monitoring and Reporting Program
ATTACHMENT 2	Biologist Resume Form
ATTACHMENT 3	Letter of Credit Form
ATTACHMENT 4	Mitigation Payment Transmittal Form

ISSUED BY THE CALIFORNIA DEPARTMENT OF FISH AND WILDLIFE

ON 1/26/2024**.**

DocuSigned by:
Erin Chappell
B77E9A6211EF486...

Erin Chappell, Regional Manager
Bay Delta Region

ACKNOWLEDGMENT

The undersigned: (1) warrants that he or she is acting as a duly authorized representative of the Permittee, (2) acknowledges receipt of this ITP, and (3) agrees on behalf of the Permittee to comply with all terms and conditions.

DocuSigned by:
By: Earl Callison
E5CBCC427D68498...
Date: 2/20/2024

Printed Name: Earl Callison
Title: Authorized Agent

DocuSign Envelope ID: A02FC8C4-93F1-485A-825A-27F65F9A227E

Monk & Associates
Environmental Consultants
1136 Saranap Avenue, Suite Q
Walnut Creek, California 94595
(925) 947-4867

Figure 1. The Creekside/Vineyards at Sand Creek
Project Site Regional Map
Antioch, California

County: Contra Costa
Map Preparation Date: November 3, 2021

DocuSign Envelope ID: A02FC8C4-93F1-485A-825A-27F65F9A227E

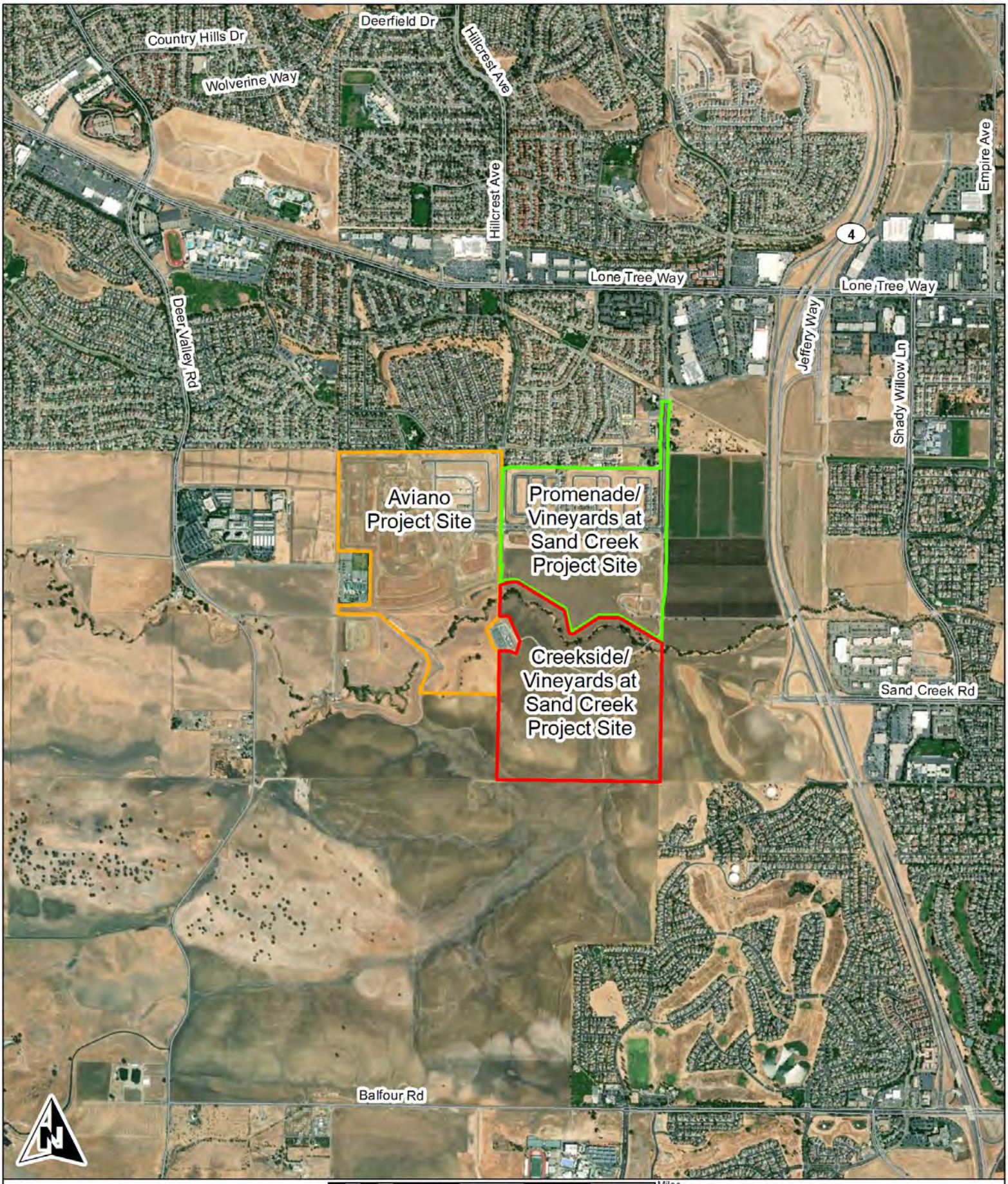

0 0.1 0.2 0.4 0.6 0.8 1 Miles

Monk & Associates
Environmental Consultants
1136 Saranap Avenue, Suite Q
Walnut Creek, California 94595
(925) 947-4867

Figure 2. The Creekside/Vineyards at Sand Creek Project Site Location Map
Antioch, California

37.943112 -121.755134
7.5-Minute Antioch South quadrangle
Section 9: T1N R2E
Aerial Photograph Source: ESRI
Map Preparation Date: July 16, 2021

DocuSign Envelope ID: A02FC8C4-93F1-485A-825A-27F65F9A227E

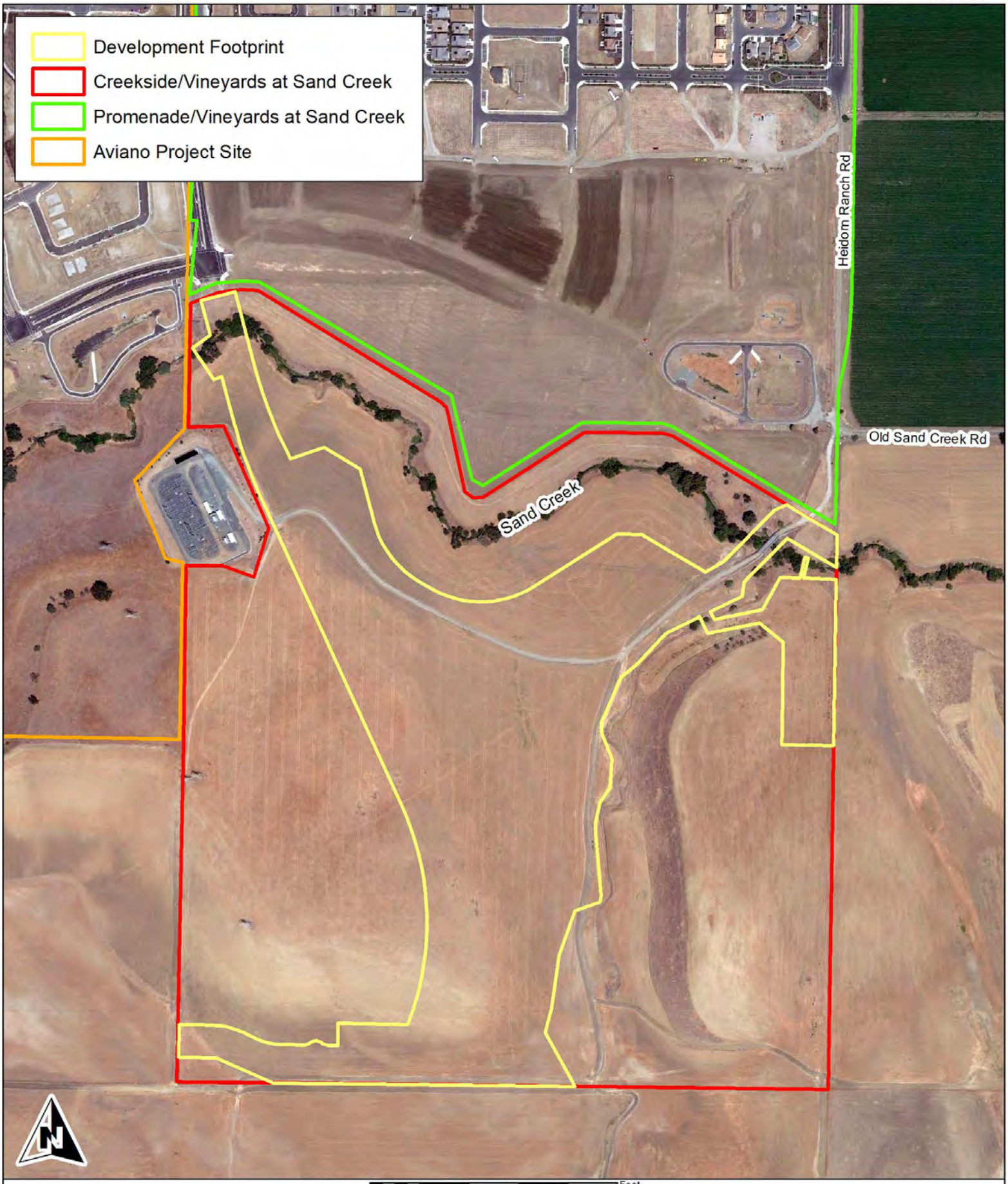

Monk & Associates
Environmental Consultants
1136 Saranap Avenue, Suite Q
Walnut Creek, California 94595
(925) 947-4867

Figure 3. Aerial Photograph of
The Creekside/Vineyards at Sand Creek Project Site
Antioch, California

Aerial Photograph Source: Google Earth
Map Preparation Date: November 3, 2021

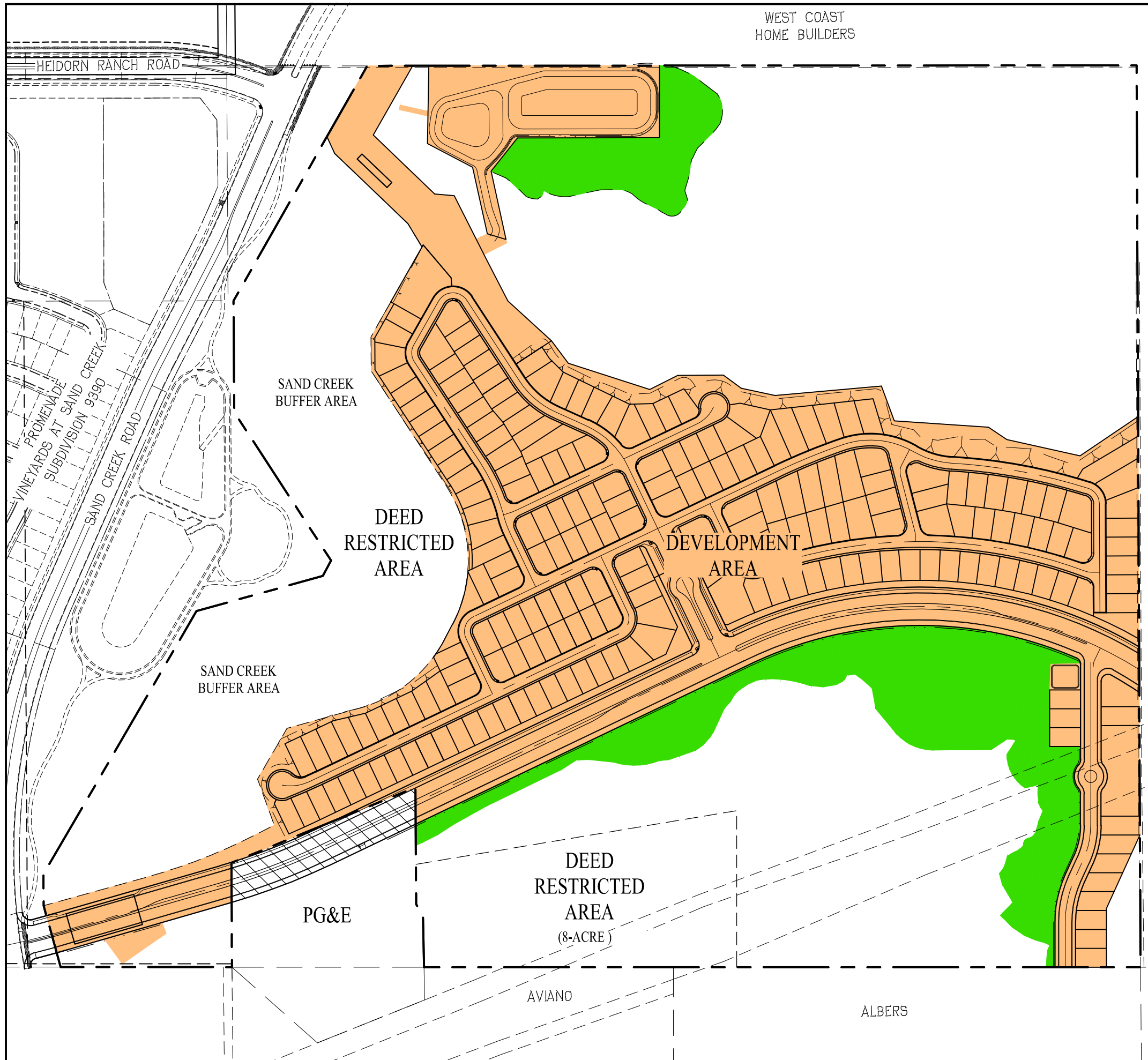

LEGEND

NO IMPACT	(57.7 AC)
GRADING	(11.0± AC)
DEED RESTRICTED AREA	(31.7± AC)
DEVELOPMENT AREA	(57.8± AC)
TOTAL	(158.2± AC)
OFFSITE IMPROVEMENTS	(1.5± AC)
PROJECT BOUNDARY	

PROJECT SITE IMPACTS OVERVIEW

CREEKSIDE

CITY OF ANTIOCH CONTRA COSTA COUNTY CALIFORNIA

DATE: AUGUST 25, 2021 SCALE: 1"=300'

cbg
SAN RAMON (925) 866-0322
SACRAMENTO (916) 375-1877
WWW.CBANDG.COM
CIVIL ENGINEERS ▪ SURVEYORS ▪ PLANNERS

DocuSign Envelope ID: A02FC8C4-93F1-485A-825A-27F65F9A227E

8/26/2021 8:41 AM

F:\974\974-51\ACAD\EXHIBITS\XB-018_IMPACT AREA SUMMARY.DWG

DocuSign Envelope ID: A02FC8C4-93F1-485A-825A-27F65F9A227E

Comment 5. Regarding E-mail 1 #4, please provide a justification for why geotextile and concreted riprap are necessary for the project design. CDFW understands that the Contra Costa County Flood Control District (CCCFD) requirement is the justification, but no proof has been provided. Geotextile will cause biological problems and justification is needed that other alternative designs were considered and will not work or an explanation is needed for why geotextile is the only option that will work for the project. If justification is not provided, the SAA language will remain unchanged. If justification is provided, your proposed revised language can be used if a good faith effort is made by the Permittee to discuss/develop alternatives to geotextile and grouted concrete use with Contra Costa County Flood Control District (CCCFD). Another measure would be added to the SAA saying prior to project construction, Permittee will provide CDFW with results from the CCCFD discussion about elimination of concreted riprap and geotextile fabric from the project design.

Response: *Enclosed is the County Standard Detail CD50. This shows both the geotextile fabric and concreted rip rap.*

I have also forwarded you the response from CCCFD indicating that they will not allow a change to the detail.

I trust this satisfies your comments for the Creekside Vineyards project. Please call if you have any further questions or comments.

Very truly yours,

Andrea J. Bellance, P.E., P.L.S.
Principal

AJB: av

DocuSign Envelope ID: A02FC8C4-93F1-485A-825A-27F65F9A227E

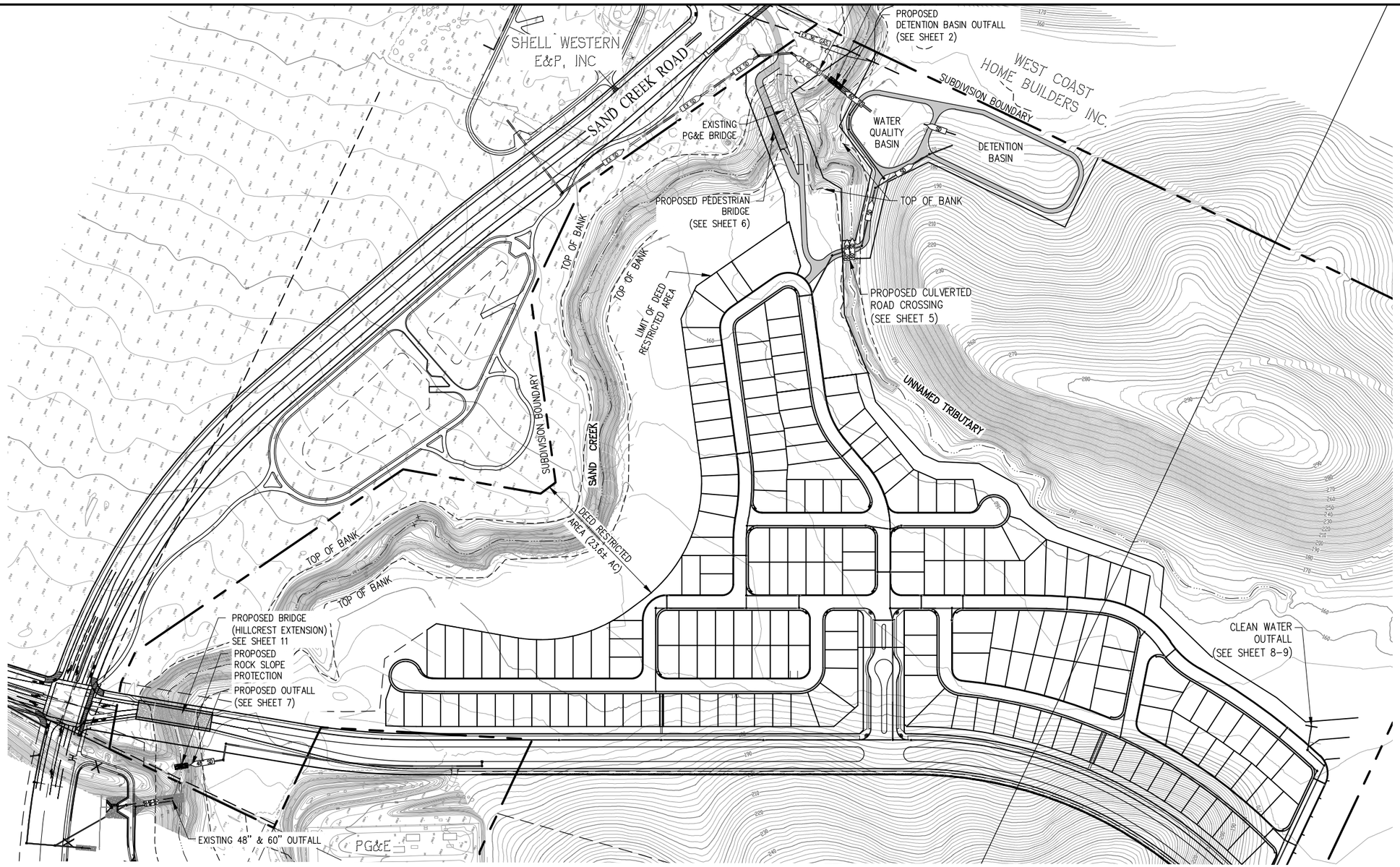

OVERVIEW

CREEKSIDE

CITY OF ANTIOCH CONTRA COSTA COUNTY CALIFORNIA

DATE: AUGUST 19, 2021 SCALE: 1"=200'

0' 200' 600' 800'

SCALE: 1" = 200'

cbg
SAN RAMON (925) 866-0322
SACRAMENTO (916) 375-1877
WWW.CBANDG.COM
CIVIL ENGINEERS ▪ SURVEYORS ▪ PLANNERS

SHEET NO. 1 OF 11 SHEETS

DRAFT

8/19/2021 10:18 AM

F:\974\974-51\ACAD\EXHIBITS\XB-016_SAND CREEK OUTFALL.DWG

DocuSign Envelope ID: A02FC8C4-93F1-485A-825A-27F65F9A227E

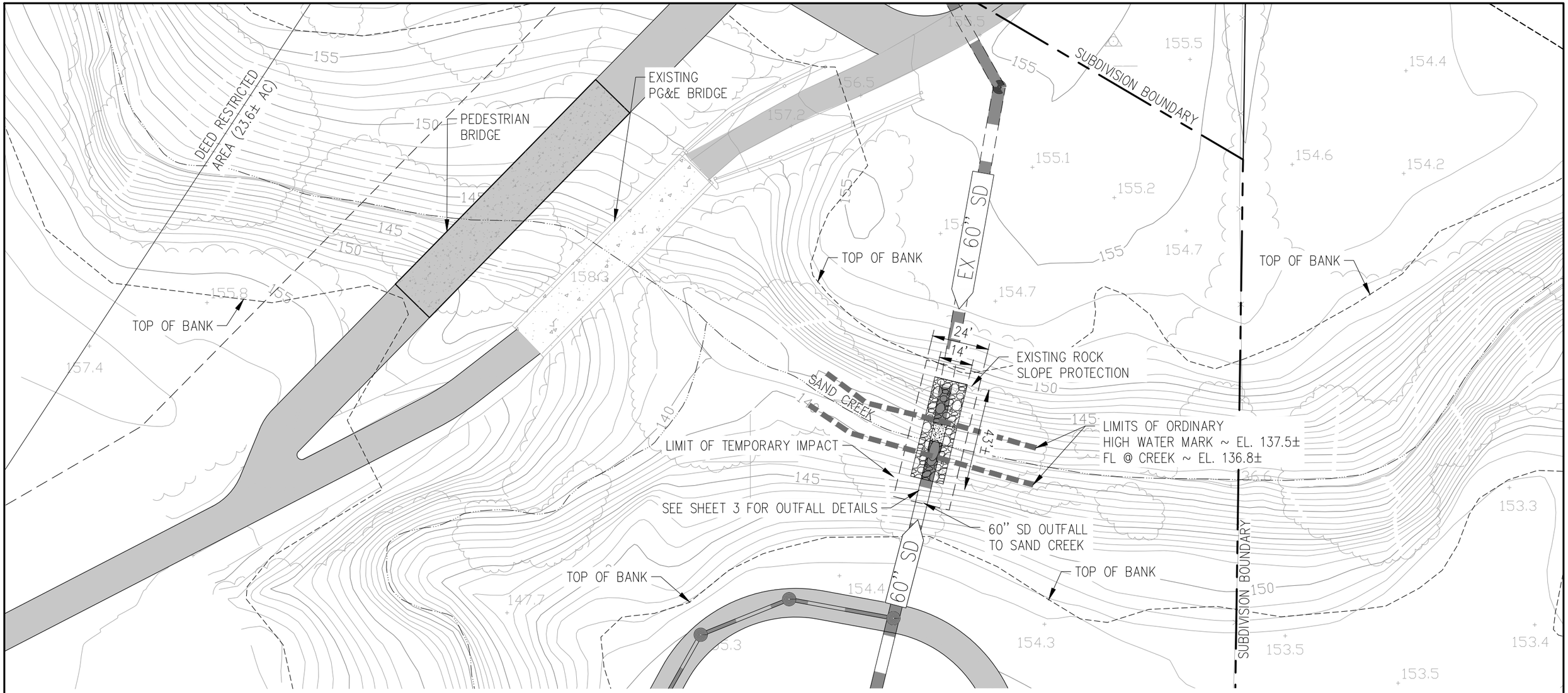

DRAFT

DETENTION BASIN AND PROPOSED OUTFALL TO SAND CREEK

CREEKSIDE

CITY OF ANTIOCH CONTRA COSTA COUNTY CALIFORNIA

DATE: AUGUST 19, 2021 SCALE: 1"=40'

OUTFALL IMPACTS		PERMANENT	TEMPORARY
BELOW TOP OF BANK	SF	1,200	1,800
BELOW HIGH WATER MARK	SF	300	500
VOLUME OF FILL BELOW TOP OF BANK	CY	180	–
VOLUME OF FILL BELOW HIGH WATER MARK	CY	60	–

NOTE:

THE TEMPORARY IMPACT AREA INCLUDES THE PERMANENT IMPACT AREA SQUARE FOOTAGE.

THE PERMANENT AREA BELOW TOP OF BANK INCLUDES THE AREA OF FILL BELOW THE HIGH WATER MARK.

THE VOLUME OF FILL BELOW TOP OF BANK INCLUDES THE VOLUME OF FILL BELOW THE HIGH WATER MARK.

0' 40' 120' 160'

SCALE: 1" = 40'

cbg
SAN RAMON (925) 866-0322
SACRAMENTO (916) 375-1877
WWW.CBANDG.COM
CIVIL ENGINEERS ▪ SURVEYORS ▪ PLANNERS

8/19/2021 12:36 PM

F:\974\974-51\ACAD\EXHIBITS\XB-016_SAND CREEK OUTFALL_SHT2-3.DWG

DocuSign Envelope ID: A02FC8C4-93F1-485A-825A-27F65F9A227E

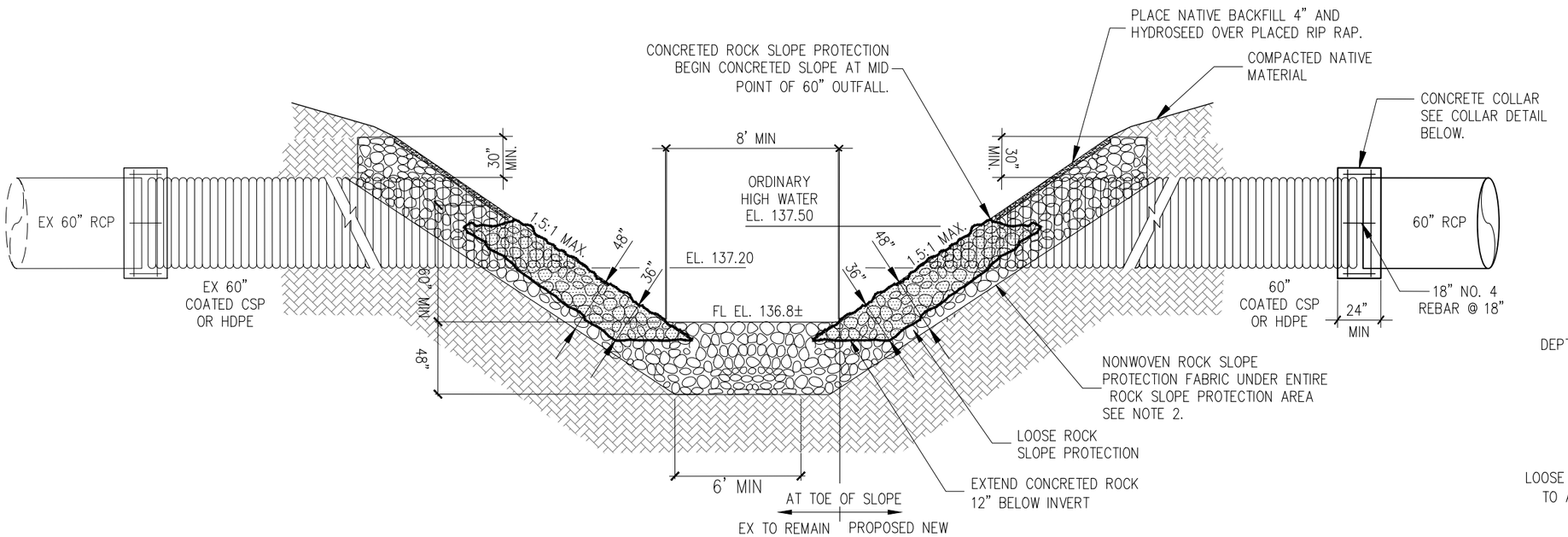

SECTION A-A

N.T.S.

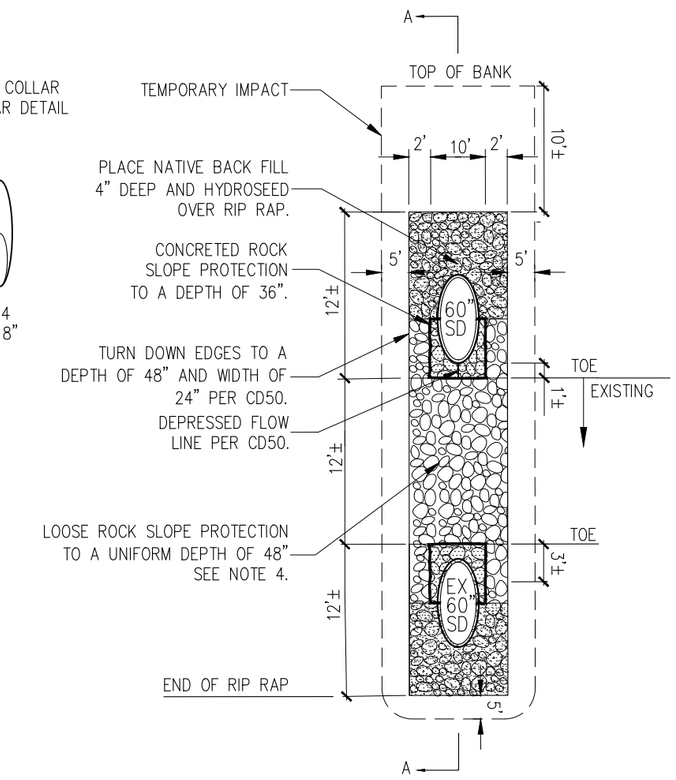

N.T.S.

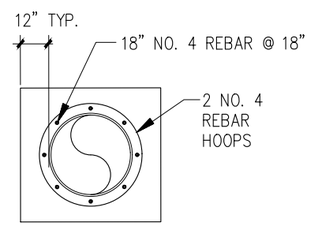

COLLAR DETAIL

N.T.S.

NOTES:

1. CONCRETED-ROCK SLOPE PROTECTION AND LOOSE ROCK SLOPE PROTECTION SHALL CONFORM TO THE STATE STANDARD SPECIFICATIONS. UNLESS OTHERWISE SPECIFIED, THE ROCK CLASS SHALL BE ¼ TON.
2. ROCK SLOPE PROTECTION FABRIC SHALL COMPLY WITH STATE STANDARD SPECIFICATIONS 72-2 "ROCK SLOPE PROTECTION". LAP ROCK SLOPE PROTECTION FABRIC IN ACCORDANCE WITH THE MANUFACTURER'S REQUIREMENTS.
3. CONCRETE SHALL BE PLACED IN ACCORDANCE WITH STATE STANDARD SPECIFICATIONS.
4. ALL LOOSE ROCK SLOPE PROTECTION SHALL BE BACKFILLED WITH NATIVE SOIL.

DRAFT

MODIFIED CONTRA COSTA COUNTY CD50 OUTFALL DETAIL

OUTFALL IMPACTS		PERMANENT	TEMPORARY
BELOW TOP OF BANK	SF	1,200	1,800
BELOW HIGH WATER MARK	SF	300	500
VOLUME OF FILL BELOW TOP OF BANK	CY	180	–
VOLUME OF FILL BELOW HIGH WATER MARK	CY	60	–

NOTE:

THE TEMPORARY IMPACT AREA INCLUDES THE PERMANENT IMPACT AREA SQUARE FOOTAGE.

THE PERMANENT AREA BELOW TOP OF BANK INCLUDES THE AREA OF FILL BELOW THE HIGH WATER MARK.

THE VOLUME OF FILL BELOW TOP OF BANK INCLUDES THE VOLUME OF FILL BELOW THE HIGH WATER MARK.

PROPOSED OUTFALL STRUCTURE TO SAND CREEK

CREEKSIDE

CITY OF ANTIOCH CONTRA COSTA COUNTY CALIFORNIA

DATE: AUGUST 19, 2021 SCALE: NTS

cbg
SAN RAMON (925) 866-0322
SACRAMENTO (916) 375-1877
WWW.CBANDG.COM
CIVIL ENGINEERS ▪ SURVEYORS ▪ PLANNERS

8/19/2021 12:36 PM

F:\974\974-51\ACAD\EXHIBITS\XB-016_SAND CREEK OUTFALL_SHT2-3.DWG

DocuSign Envelope ID: A02FC8C4-93F1-485A-825A-27F65F9A227E

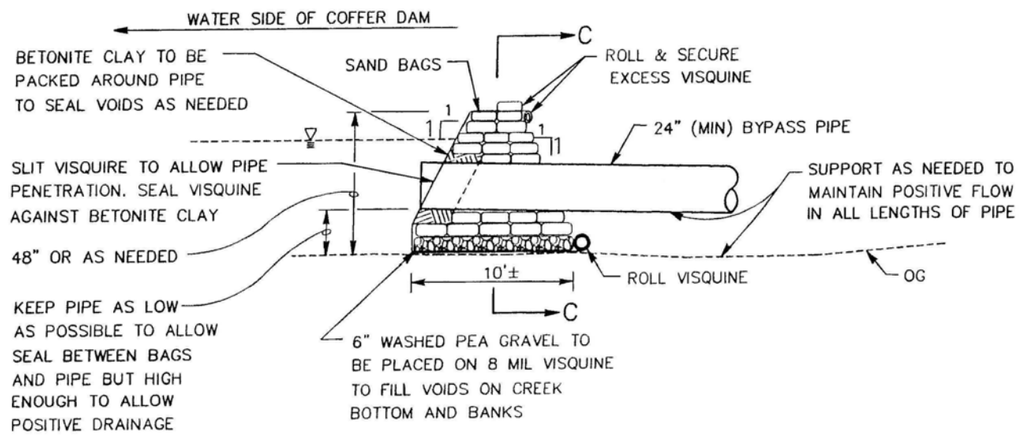

COFFER DAM DETAIL

NTS

NOTE: 1. DEWATER USING PUMPS AS NEEDED. DISCHARGE SILTY WATER PER PERMIT REQUIREMENTS. ANY WATER REMOVED FROM WORK AREA MUST BE PUMPED TO THE TOP OF BANK AND DESILTED PRIOR TO RETURNING TO THE CREEK.

2. IF OVERLAPPING OF VISQUINE IS NEEDED, OVERLAP 4 FEET MINIMUM AND SEAL SEAM WITH APPROPRIATE SEALER OR METHODS.

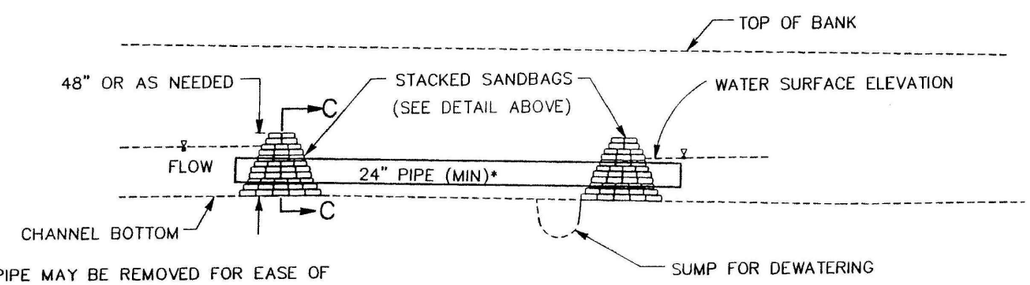

*NOTE: PIPE MAY BE REMOVED FOR EASE OF CONSTUCTION IF WEATHER SHOWS LONG TERM CHANCE OF PRECIPITATION TO BE LOW. PUMPING LOW FLOWS AROUND SITE ARE ALLOWED DURING THESE TIMES.

PROFILE

NTS

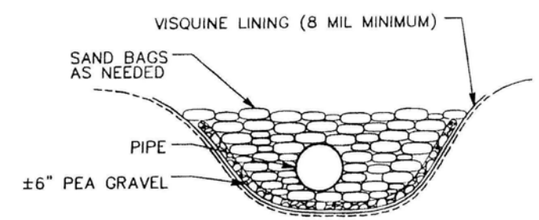

SECTION C-C

COFFER DAM CROSS
NTS

PROPOSED COFFER DAM DETAIL

CREEKSIDE

CITY OF ANTIOCH CONTRA COSTA COUNTY CALIFORNIA

DATE: AUGUST 19, 2021

cbg
SAN RAMON (925) 866-0322
SACRAMENTO (916) 375-1877
WWW.CBANDG.COM
CIVIL ENGINEERS ▪ SURVEYORS ▪ PLANNERS

SHEET NO. 4 OF 11 SHEETS

DRAFT

8/19/2021 12:34 PM

F:\974\974-51\ACAD\EXHIBITS\XB-016_SAND CREEK OUTFALL_SHT4.DWG

DocuSign Envelope ID: A02FC8C4-93F1-485A-825A-27F65F9A227E

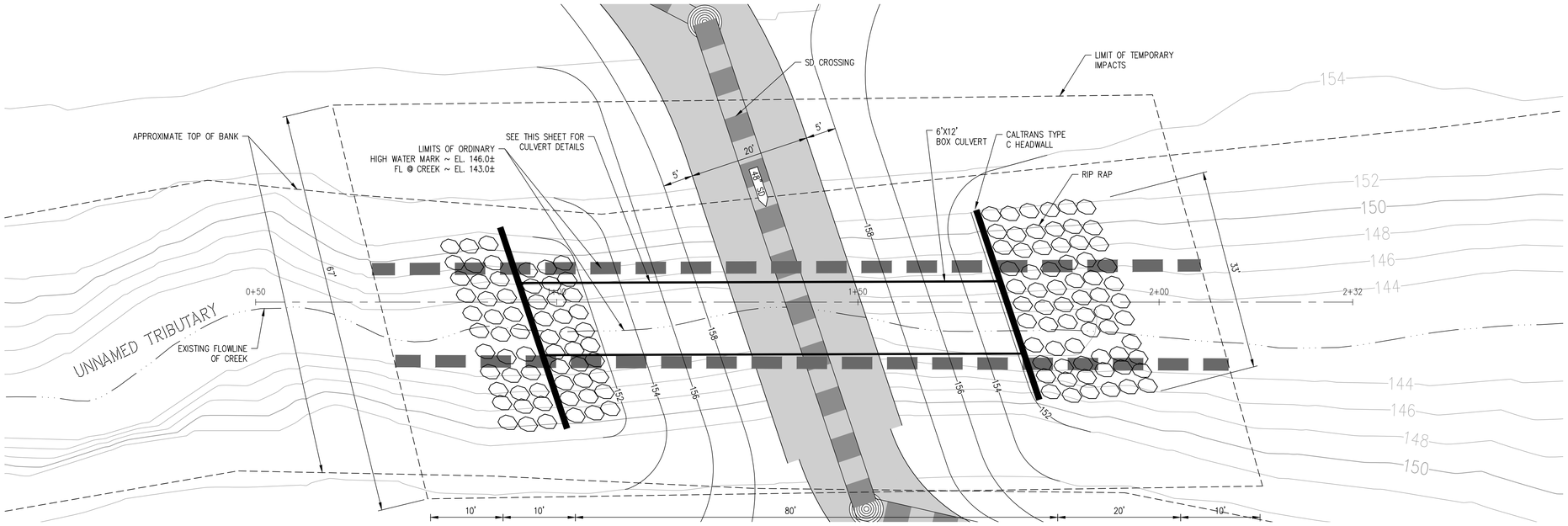

BOX CULVERT ROAD CROSSING

SCALE: 1" = 10'

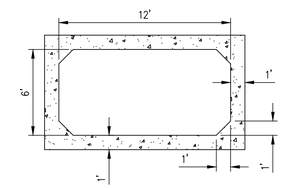

BOX CULVERT CROSS SECTION

NOT TO SCALE

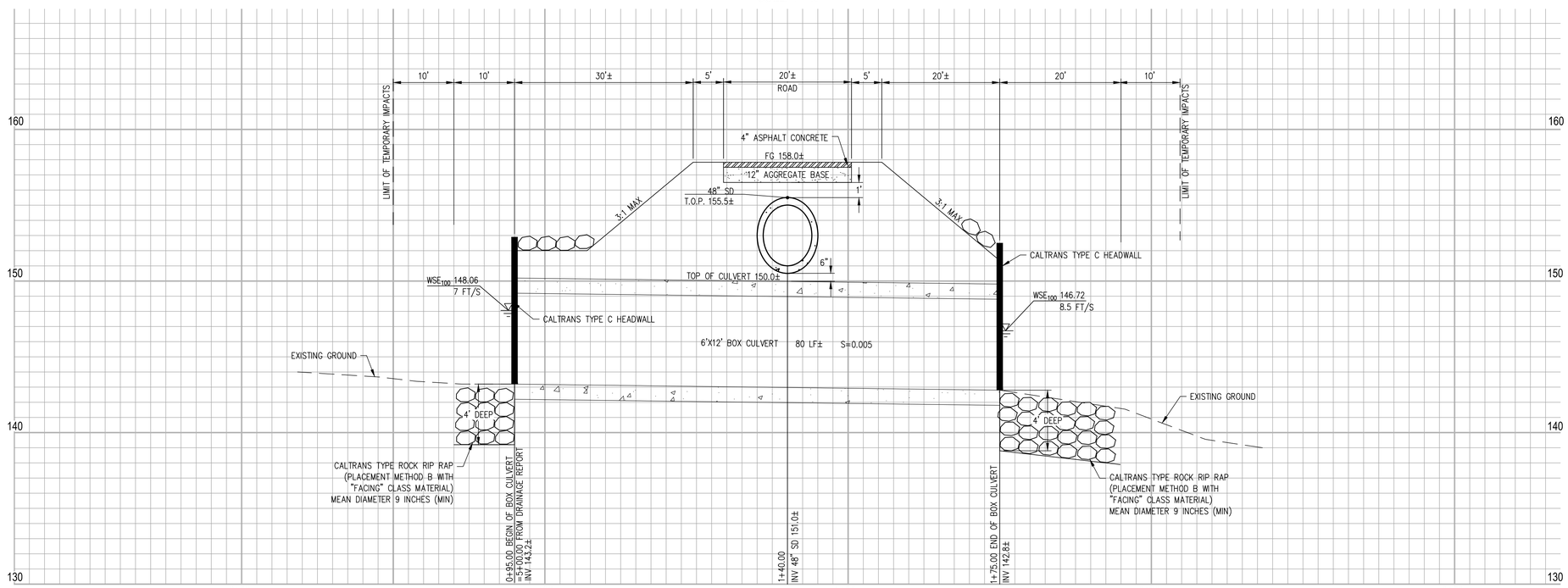

PROFILE

SCALE: HORIZONTAL 1" = 10'
VERTICAL 1" = 4'

CULVERT IMPACTS		PERMANENT	TEMPORARY
BELOW TOP OF BANK	SF	6,200	6,700
BELOW HIGH WATER MARK	SF	1,380	1,800
VOLUME OF FILL BELOW TOP OF BANK	CY	2,500	–
VOLUME OF FILL BELOW HIGH WATER MARK	CY	1,350	–

NOTE:
THE TEMPORARY IMPACT AREA INCLUDES THE PERMANENT IMPACT AREA SQUARE FOOTAGE.

THE PERMANENT AREA BELOW TOP OF BANK INCLUDES THE AREA OF FILL BELOW THE HIGH WATER MARK.

THE VOLUME OF FILL BELOW TOP OF BANK INCLUDES THE VOLUME OF FILL BELOW THE HIGH WATER MARK.

NOTE:
1. ROCK SLOPE PROTECTION FABRIC SHALL COMPLY WITH STATE STANDARD SPECIFICATIONS 72-2 "ROCK SLOPE PROTECTION". LAP ROCK SLOPE PROTECTION FABRIC IN ACCORDANCE WITH THE MANUFACTURER'S REQUIREMENTS.

BOX CULVERT ROAD CROSSING

CREEKSIDE

CITY OF ANTIOCH CONTRA COSTA COUNTY CALIFORNIA

DATE: AUGUST 19, 2021 SCALE: 1"=10'

REVISED: JANUARY 18, 2023

0' 10' 30' 40'
SCALE: 1" = 10'

cbg
CIVIL ENGINEERS ▪ SURVEYORS ▪ PLANNERS
SAN RAMON ▪ (925) 866-0322
ROSEVILLE ▪ (916) 788-4456
WWW.CBANDG.COM

SHEET NO. 5 OF 18 SHEETS

65 % PLANS

DocuSign Envelope ID: A02FC8C4-93F1-485A-825A-27F65F9A227E

DRAFT

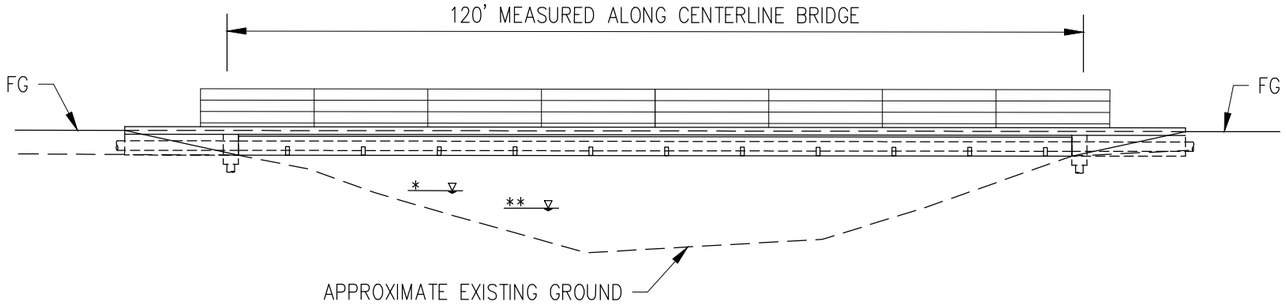

* APPROXIMATE 100 YR NON-MITIGATED WSE 149.1±
** APPROXIMATE 100 YR MITIGATED WSE 147.7±

ELEVATION

NOT TO SCALE

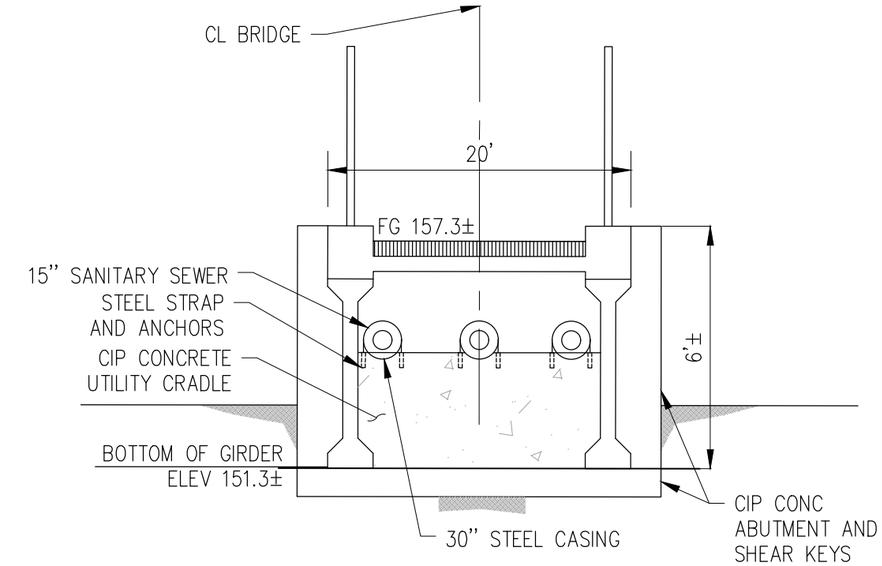

TYPICAL SECTION

NOT TO SCALE

BRIDGE IMPACTS		PERMANENT	TEMPORARY
BELOW TOP OF BANK	SF	6,500	8,400
BELOW HIGH WATER MARK	SF	0	0
VOLUME OF FILL BELOW TOP OF BANK	CY	450	–
VOLUME OF FILL BELOW HIGH WATER MARK	CY	0	–

NOTE:
THE TEMPORARY IMPACT AREA INCLUDES THE PERMANENT IMPACT AREA SQUARE FOOTAGE.

THE PERMANENT AREA BELOW TOP OF BANK INCLUDES THE AREA OF FILL BELOW THE HIGH WATER MARK.

THE VOLUME OF FILL BELOW TOP OF BANK INCLUDES THE VOLUME OF FILL BELOW THE HIGH WATER MARK.

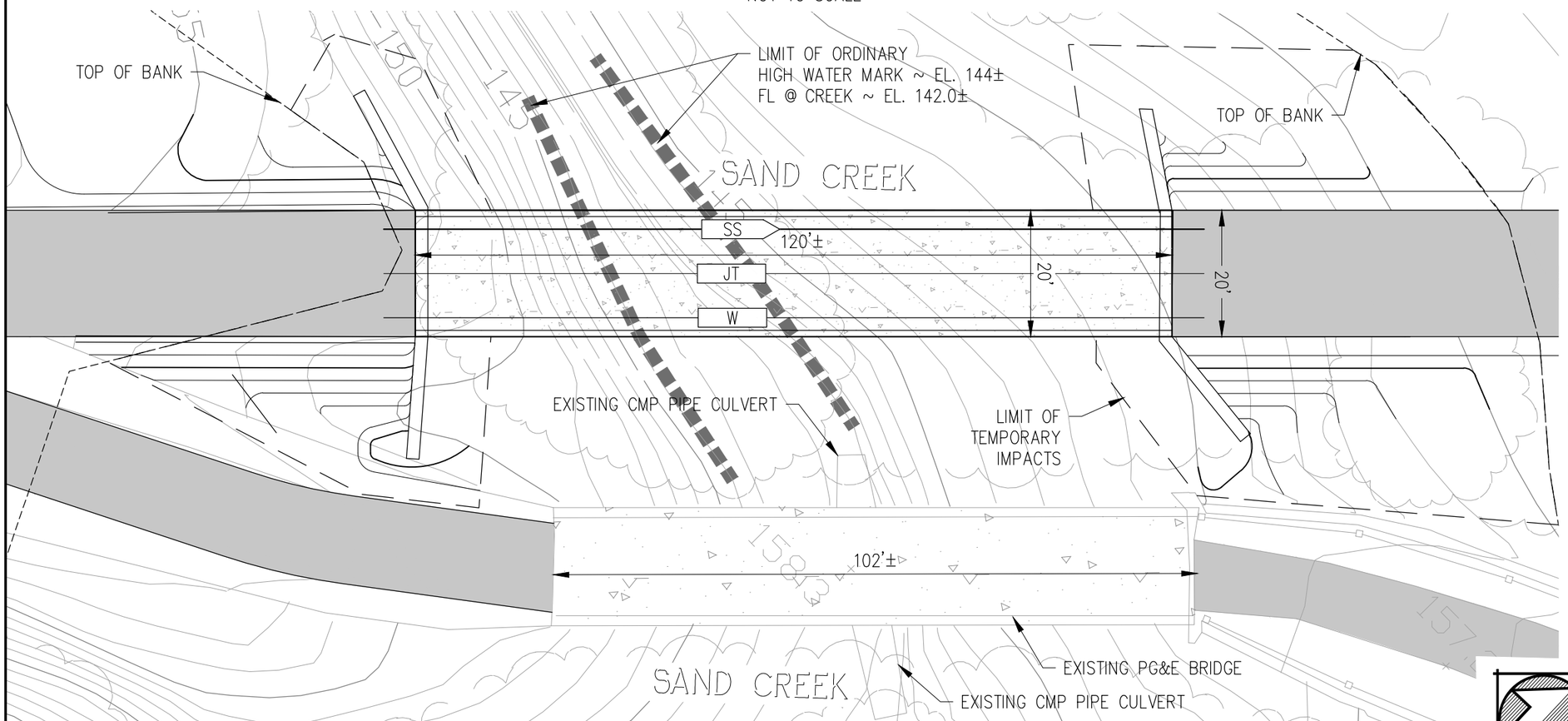

PLAN VIEW

NOT TO SCALE

PEDESTRIAN BRIDGE CROSSING (EVA)

CREEKSIDE

CITY OF ANTIOCH CONTRA COSTA COUNTY CALIFORNIA

DATE: AUGUST 19, 2021 SCALE: 1"=40'

cbg
SAN RAMON (925) 866-0322
SACRAMENTO (916) 375-1877
WWW.CBANDG.COM
CIVIL ENGINEERS ▪ SURVEYORS ▪ PLANNERS

SHEET NO. 6 OF 11 SHEETS

8/19/2021 12:53 PM

F:\974\974-51\ACAD\EXHIBITS\XB-021_PEDESTRIAN BRIDGE.DWG

DocuSign Envelope ID: A02FC8C4-93F1-485A-825A-27F65F9A227E

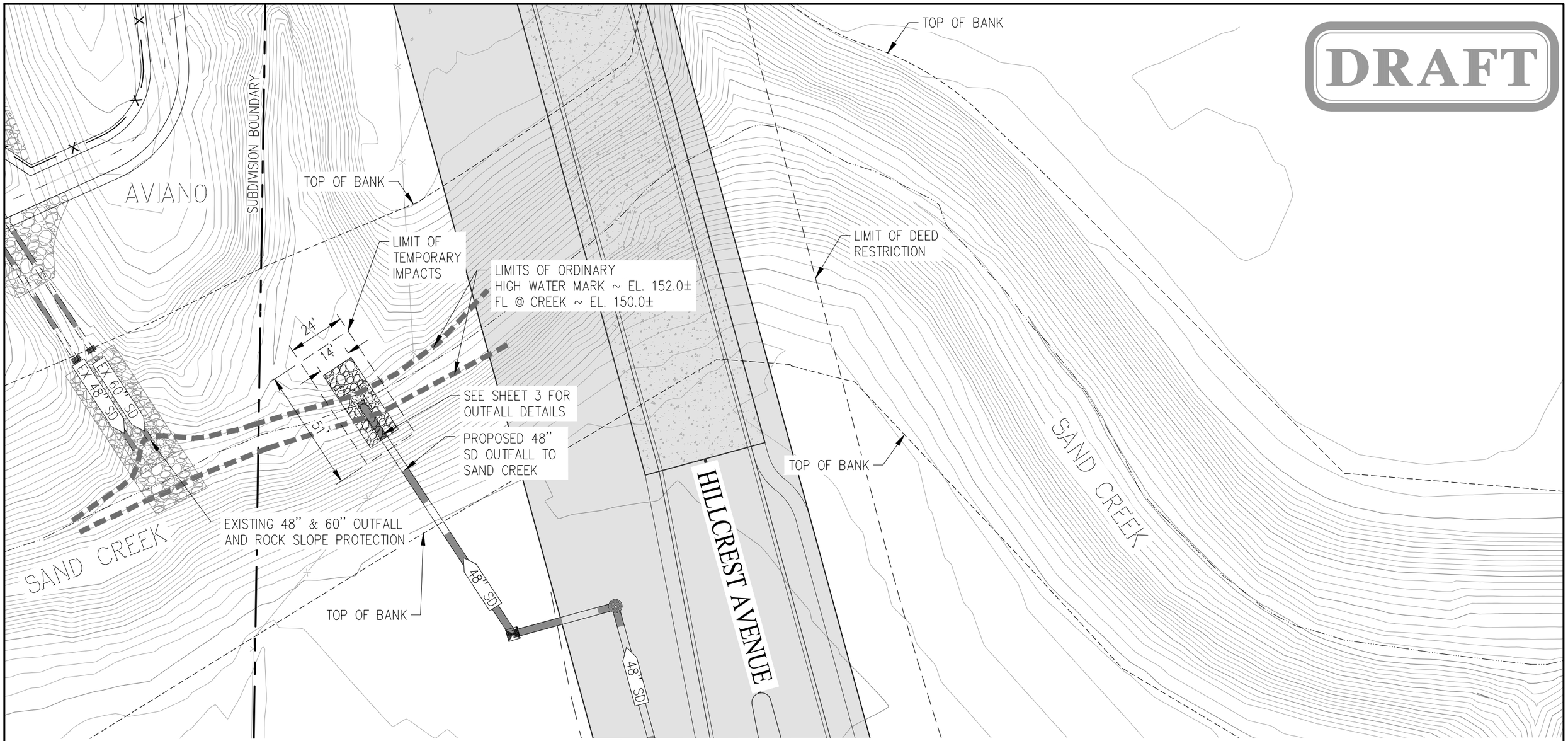

PROPOSED OUTFALL TO SAND CREEK

CREEKSIDE

CITY OF ANTIOCH CONTRA COSTA COUNTY CALIFORNIA

DATE: AUGUST 19, 2021 SCALE: 1"=200'

OUTFALL IMPACTS		PERMANENT	TEMPORARY
BELOW TOP OF BANK	SF	1,200	1,800
BELOW HIGH WATER MARK	SF	300	450
VOLUME OF FILL BELOW TOP OF BANK	CY	180	–
VOLUME OF FILL BELOW HIGH WATER MARK	CY	50	–

NOTE:

THE TEMPORARY IMPACT AREA INCLUDES THE PERMANENT IMPACT AREA SQUARE FOOTAGE.

THE PERMANENT AREA BELOW TOP OF BANK INCLUDES THE AREA OF FILL BELOW THE HIGH WATER MARK.

THE VOLUME OF FILL BELOW TOP OF BANK INCLUDES THE VOLUME OF FILL BELOW THE HIGH WATER MARK.

0' 40' 120' 160'

SCALE: 1" = 40'

cbg
SAN RAMON (925) 866-0322
SACRAMENTO (916) 375-1877
WWW.CBANDG.COM
CIVIL ENGINEERS ▪ SURVEYORS ▪ PLANNERS

SHEET NO. 7 OF 11 SHEETS

8/19/2021 12:56 PM

F:\974\974-51\ACAD\EXHIBITS\XB-019_SAND CREEK OUTFALL 2_SHT2-3.DWG

DocuSign Envelope ID: A02FC8C4-93F1-485A-825A-27F65F9A227E

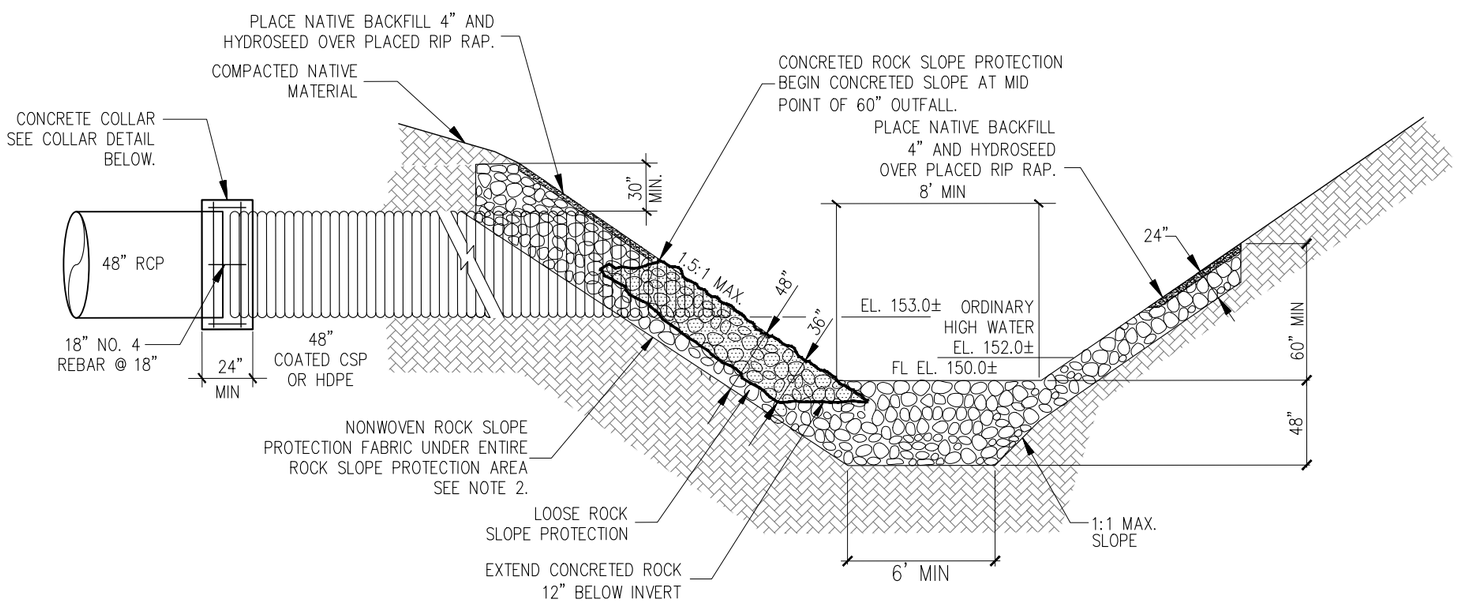

SECTION A-A

N.T.S.

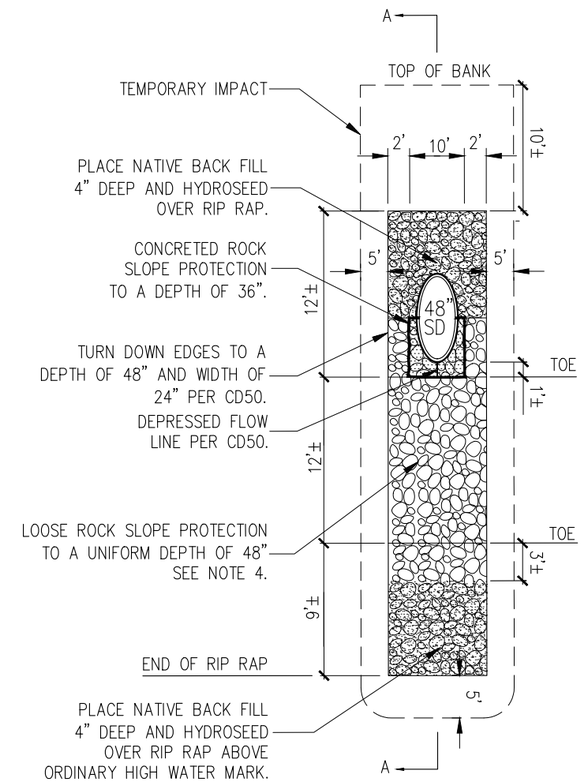

N.T.S.

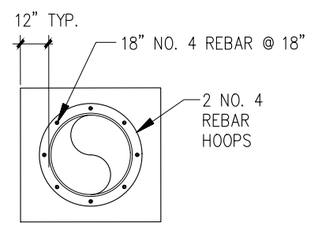

COLLAR DETAIL

N.T.S.

NOTES:

1. CONCRETED-ROCK SLOPE PROTECTION AND LOOSE ROCK SLOPE PROTECTION SHALL CONFORM TO THE STATE STANDARD SPECIFICATIONS. UNLESS OTHERWISE SPECIFIED, THE ROCK CLASS SHALL BE ¼ TON.
2. ROCK SLOPE PROTECTION FABRIC SHALL COMPLY WITH STATE STANDARD SPECIFICATIONS 72-2 "ROCK SLOPE PROTECTION". LAP ROCK SLOPE PROTECTION FABRIC IN ACCORDANCE WITH THE MANUFACTURER'S REQUIREMENTS.
3. CONCRETE SHALL BE PLACED IN ACCORDANCE WITH STATE STANDARD SPECIFICATIONS.
4. ALL LOOSE ROCK SLOPE PROTECTION SHALL BE BACKFILLED WITH NATIVE SOIL.

MODIFIED CONTRA COSTA COUNTY CD50 OUTFALL DETAIL

OUTFALL IMPACTS		PERMANENT	TEMPORARY
BELOW TOP OF BANK	SF	1,200	1,800
BELOW HIGH WATER MARK	SF	300	450
VOLUME OF FILL BELOW TOP OF BANK	CY	180	–
VOLUME OF FILL BELOW HIGH WATER MARK	CY	50	–

NOTE:

THE TEMPORARY IMPACT AREA INCLUDES THE PERMANENT IMPACT AREA SQUARE FOOTAGE.

THE PERMANENT AREA BELOW TOP OF BANK INCLUDES THE AREA OF FILL BELOW THE HIGH WATER MARK.

THE VOLUME OF FILL BELOW TOP OF BANK INCLUDES THE VOLUME OF FILL BELOW THE HIGH WATER MARK.

DRAFT

PROPOSED OUTFALL STRUCTURE TO SAND CREEK

CREEKSIDE

CITY OF ANTIOCH CONTRA COSTA COUNTY CALIFORNIA

DATE: AUGUST 19, 2021 SCALE: NTS

cbg
SAN RAMON (925) 866-0322
SACRAMENTO (916) 375-1877
WWW.CBANDG.COM
CIVIL ENGINEERS ▪ SURVEYORS ▪ PLANNERS

SHEET NO. 8 OF 11 SHEETS

8/19/2021 12:56 PM

F:\974\974-51\ACAD\EXHIBITS\XB-019_SAND CREEK OUTFALL 2_SHT2-3.DWG

DocuSign Envelope ID: A02FC8C4-93F1-485A-825A-27F65F9A227E

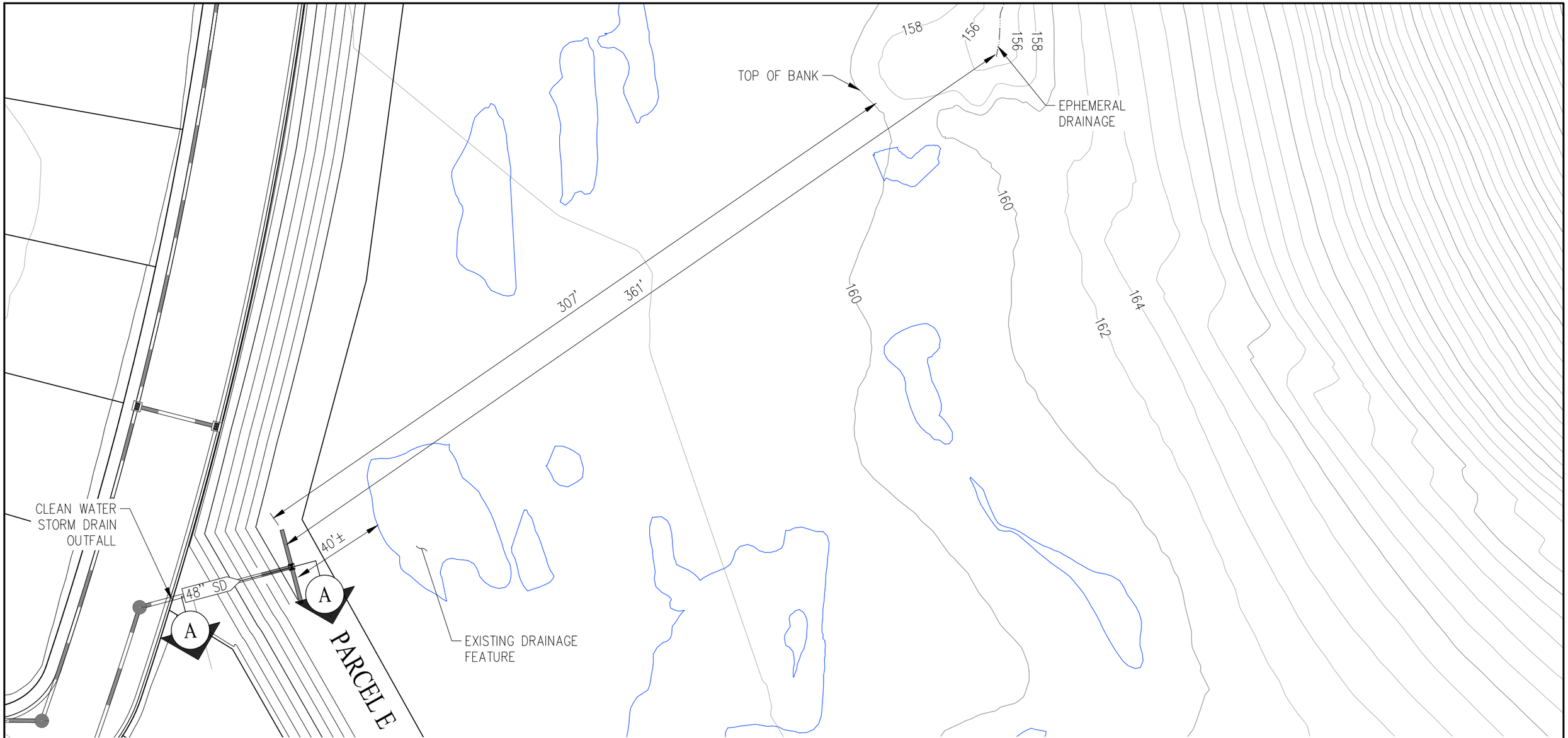

PROPOSED CLEAN WATER OUTFALL

CREEKSIDE

CITY OF ANTIOCH CONTRA COSTA COUNTY CALIFORNIA

DATE: AUGUST 19, 2021

OUTFALL IMPACTS		PERMANENT	TEMPORARY
BELOW TOP OF BANK	SF	0	0
BELOW HIGH WATER MARK	SF	0	0
VOLUME OF FILL BELOW TOP OF BANK	CY	0	0
VOLUME OF FILL BELOW HIGH WATER MARK	CY	0	0

NOTE:

THE TEMPORARY IMPACT AREA INCLUDES THE PERMANENT IMPACT AREA SQUARE FOOTAGE.

THE PERMANENT AREA BELOW TOP OF BANK INCLUDES THE AREA OF FILL BELOW THE HIGH WATER MARK.

THE VOLUME OF FILL BELOW TOP OF BANK INCLUDES THE VOLUME OF FILL BELOW THE HIGH WATER MARK.

0' 40' 120' 160'

SCALE: 1" = 40'

cbg
CIVIL ENGINEERS ▪ SURVEYORS ▪ PLANNERS
SAN RAMON (925) 866-0322
SACRAMENTO (916) 375-1877
WWW.CBANDG.COM

SHEET NO. 9 OF 11 SHEETS

8/19/2021 12:33 PM

F:\974\974-51\ACAD\EXHIBITS\XB-019A_CLEAN WATER OUTFALL_SHT2-3.DWG

DocuSign Envelope ID: A02FC8C4-93F1-485A-825A-27F65F9A227E

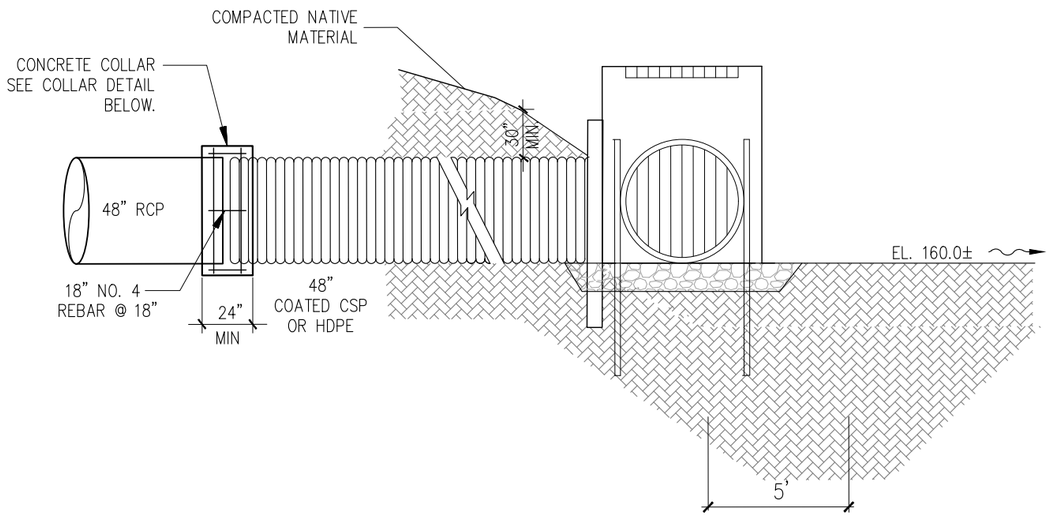

SECTION A-A

N.T.S.

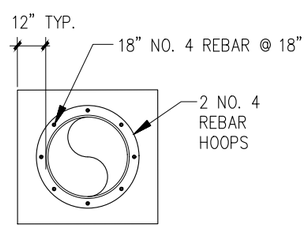

COLLAR DETAIL

N.T.S.

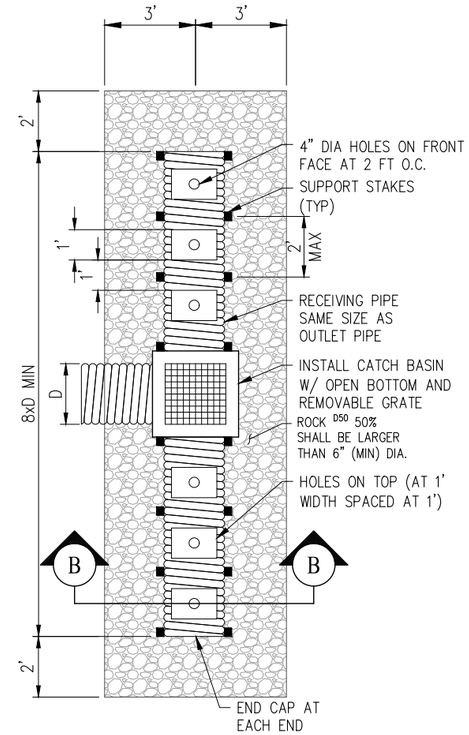

PLAN

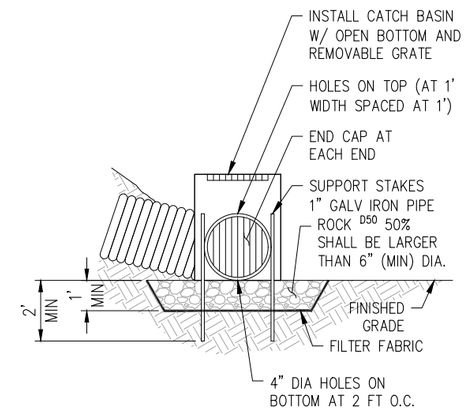

SECTION B-B

ENERGY DISSIPATOR DETAIL

NOT TO SCALE

PROPOSED OUTFALL STRUCTURE TO EPHEMERAL DRAINAGE

CREEKSIDE

CITY OF ANTIOCH CONTRA COSTA COUNTY CALIFORNIA

DATE: AUGUST 19, 2021 SCALE: NTS

cbg
SAN RAMON (925) 866-0322
SACRAMENTO (916) 375-1877
WWW.CBANDG.COM
CIVIL ENGINEERS ▪ SURVEYORS ▪ PLANNERS

SHEET NO. 10 OF 11 SHEETS

8/19/2021 12:33 PM

F:\974\974-51\ACAD\EXHIBITS\XB-019A_CLEAN WATER OUTFALL_SHT2-3.DWG

DocuSign Envelope ID: A02FC8C4-93F1-485A-825A-27F65F9A227E

DRAFT

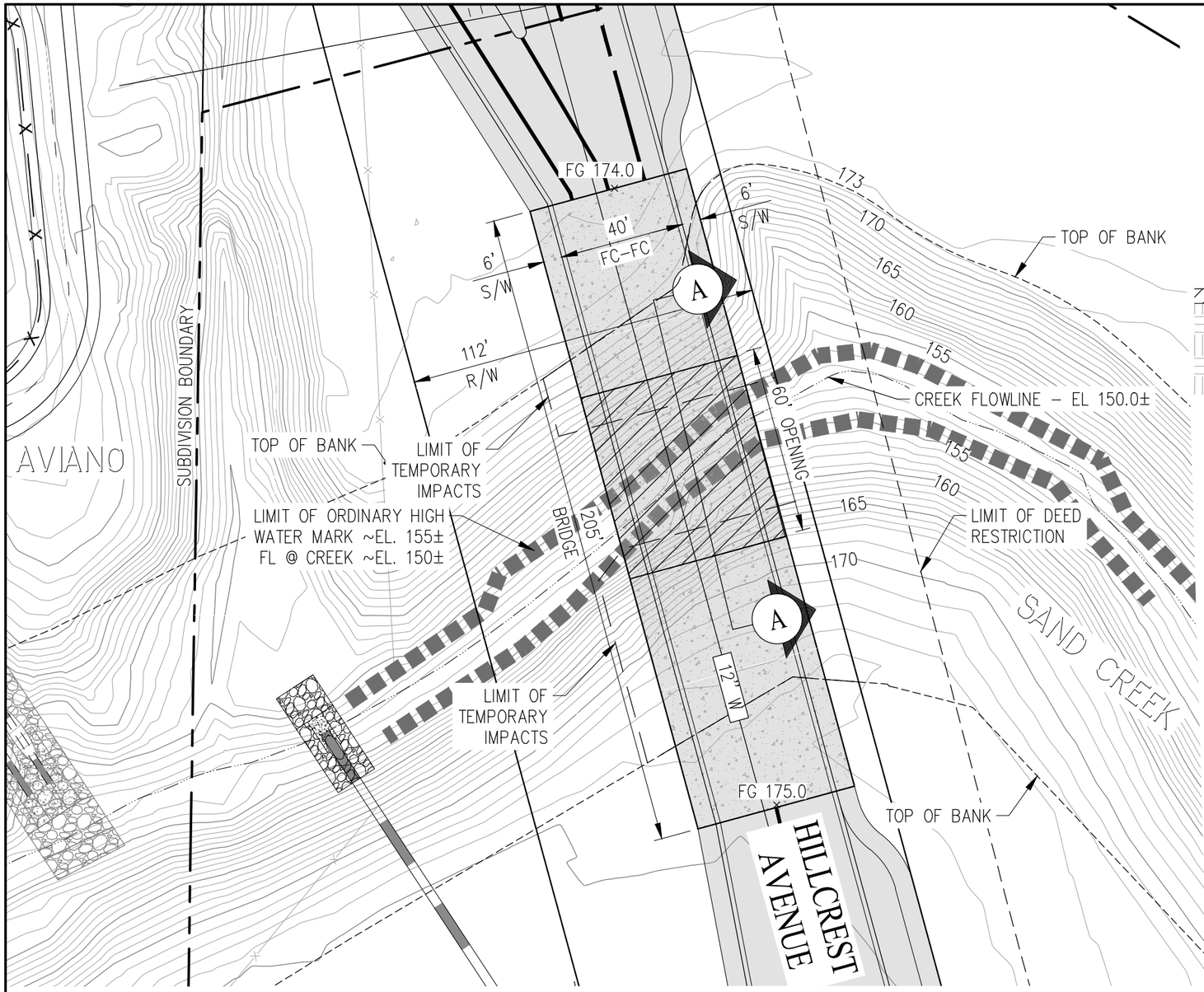

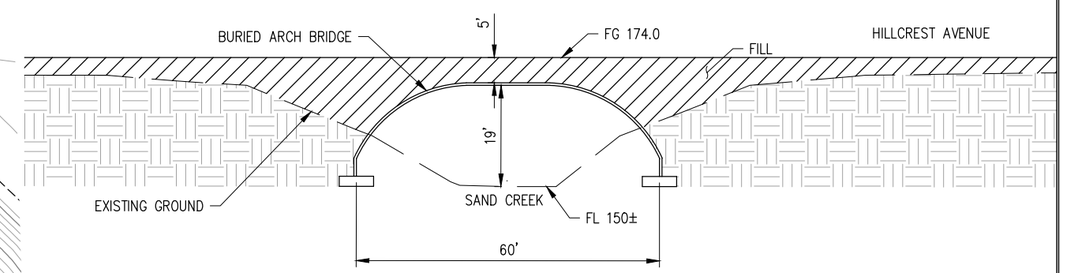

SECTION A-A

HILLCREST AVENUE BRIDGE (PHASE 1)

CREEKSIDE

CITY OF ANTIOCH CONTRA COSTA COUNTY CALIFORNIA

DATE: AUGUST 19, 2021

OUTFALL IMPACTS		PERMANENT	TEMPORARY
BELOW TOP OF BANK	SF	3,810	6,900
BELOW HIGH WATER MARK	SF	0	0
VOLUME OF FILL BELOW TOP OF BANK	CY	700	–
VOLUME OF FILL BELOW HIGH WATER MARK	CY	0	–

NOTE:

THE TEMPORARY IMPACT AREA INCLUDES THE PERMANENT IMPACT AREA SQUARE FOOTAGE.

THE PERMANENT AREA BELOW TOP OF BANK INCLUDES THE AREA OF FILL BELOW THE HIGH WATER MARK.

THE VOLUME OF FILL BELOW TOP OF BANK INCLUDES THE VOLUME OF FILL BELOW THE HIGH WATER MARK.

0' 40' 120' 160'

SCALE: 1" = 40'

cbg
SAN RAMON (925) 866-0322
SACRAMENTO (916) 375-1877
WWW.CBANDG.COM
CIVIL ENGINEERS ▪ SURVEYORS ▪ PLANNERS

8/19/2021 10:18 AM
F:\974\974-51\ACAD\EXHIBITS\XB-036_HCA BRIDGE OVERVIEW.DWG

DocuSign Envelope ID: A02FC8C4-93F1-485A-825A-27F65F9A227E

Attachment 1

CALIFORNIA DEPARTMENT OF FISH AND WILDLIFE
MITIGATION MONITORING AND REPORTING PROGRAM (MMRP)
CALIFORNIA ENDANGERED SPECIES ACT
INCIDENTAL TAKE PERMIT NO. 2081-2021-097-03

PERMITTEE: **GBN Partners, LLC**

PROJECT: **Creekside/Vineyards at Sand Creek Project**

PURPOSE OF THE MMRP

The purpose of the MMRP is to ensure that the impact minimization and mitigation measures required by the California Department of Fish and Wildlife (CDFW) for the above-referenced Project are properly implemented, and thereby to ensure compliance with section 2081(b) of the Fish and Game Code and section 21081.6 of the Public Resources Code. A table summarizing the mitigation measures required by CDFW is attached. This table is a tool for use in monitoring and reporting on implementation of mitigation measures, but the descriptions in the table do not supersede the mitigation measures set forth in the California Incidental Take Permit (ITP) and in attachments to the ITP, and the omission of a permit requirement from the attached table does not relieve the Permittee of the obligation to ensure the requirement is performed.

OBLIGATIONS OF PERMITTEE

Mitigation measures must be implemented within the time periods indicated in the table that appears below. Permittee has the primary responsibility for monitoring compliance with all mitigation measures and for reporting to CDFW on the progress in implementing those measures. These monitoring and reporting requirements are set forth in the ITP itself and are summarized at the front of the attached table.

VERIFICATION OF COMPLIANCE, EFFECTIVENESS

CDFW may, at its sole discretion, verify compliance with any mitigation measure or independently assess the effectiveness of any mitigation measure.

TABLE OF MITIGATION MEASURES

The following items are identified for each mitigation measure: Mitigation Measure, Source, Implementation Schedule, Responsible Party, and Status/Date/Initials. The Mitigation Measure column summarizes the mitigation requirements of the ITP. The Source column identifies the ITP condition that sets forth the mitigation measure. The Implementation Schedule column shows the date or phase when each mitigation measure will be implemented. The Responsible Party column identifies the person or agency that is primarily responsible for implementing the mitigation measure. The Status/Date/Initials column shall be completed by the Permittee during preparation of each Status Report and the Final Mitigation Report, and must identify the implementation status of each mitigation measure, the date that status was determined, and the initials of the person determining the status.

	Mitigation Measure	Source	Implementation Schedule	Responsible Party	Status / Date / Initials
	BEFORE DISTURBING SOIL OR VEGETATION				
1	Designated Representative. Before starting Covered Activities, Permittee shall designate a representative (Designated Representative) responsible for communications with CDFW and overseeing compliance with this ITP. Permittee shall notify CDFW in writing before initiation of Covered Activities of the Designated Representative's name, business address, and contact information, and shall notify CDFW in writing if a substitute Designated Representative is selected or identified at any time during the term of this ITP.	ITP Condition # 6.1	Before commencing ground- or vegetation-disturbing activities/ Entire Project	Permittee	
2	Designated Biologist(s) and Biological Monitor(s). Permittee shall submit to CDFW in writing the name, qualifications, business address, and contact information of the Designated Biologist(s) and Biological Monitor(s) using the Biologist Resume Form (Attachment 2) or another format containing the same information at least 30 days before starting Covered Activities. Permittee shall ensure that the Designated Biologist(s) and Biological Monitor(s) are knowledgeable and experienced in the biology, natural history, collecting, and handling of the Covered Species. The Designated Biologist(s) and Biological Monitor(s) shall be responsible for monitoring Covered Activities to help minimize and fully mitigate or avoid the incidental take of individual Covered Species and to minimize disturbance of Covered Species' habitat. Permittee shall obtain CDFW approval of the Designated Biologist(s) and Biological Monitor(s) in writing before starting Covered Activities and shall also obtain approval in advance, in writing, if the Designated Biologist(s) or Biological Monitor(s) must be changed.	ITP Condition # 6.2	Before commencing ground- or vegetation-disturbing activities	Permittee	
3	Education Program. Permittee shall conduct an in-person education program for all persons employed or otherwise working in the Project Area before performing any work. The program shall consist of a presentation from a Designated Biologist that includes a discussion of the biology and general behavior of the Covered Species, information about the distribution and habitat needs of the Covered Species, sensitivity of the Covered Species to human activities, its status pursuant to CESA including legal protection, recovery efforts, penalties for violations and Project-specific protective measures described in this ITP. Permittee shall prepare and distribute wallet-sized cards or a fact sheet handout containing this information for workers to carry in the Project Area. Permittee shall provide interpretation for non-English speaking workers, and the same instruction shall be provided to any new workers before they are authorized to perform work in the Project Area. Upon completion of the program, employees shall sign a form stating they attended the program and understand all protection measures. This training shall be repeated at least once annually for long-term and/or permanent employees that will be conducting work in the Project Area.	ITP Condition # 6.4	Before commencing ground- or vegetation-disturbing activities/ Entire Project	Permittee	
4	Construction Schedule. Permittee shall submit a final construction schedule showing Project phasing, commencement dates, and completion dates of Covered Activities to CDFW within 15 calendar days prior to the initiation of Covered Activities. During the Project construction period, Permittee shall notify CDFW of any major changes in construction schedule at least seven (7) days prior to the change being implemented.	ITP Condition # 6.5	Before commencing ground- or vegetation-disturbing activities	Permittee	

	Mitigation Measure	Source	Implementation Schedule	Responsible Party	Status / Date / Initials
5	Trash Abatement. Permittee shall initiate a trash abatement program before starting Covered Activities and shall continue the program for the duration of the Project. Permittee shall ensure that trash and food items are contained in animal-proof containers and removed, ideally at daily intervals but at least once a week, to avoid attracting opportunistic predators such as ravens, coyotes, and feral dogs.	ITP Condition # 6.7	Before commencing ground- or vegetation-disturbing activities/ Entire Project	Permittee	
6	Erosion Control Materials. Permittee shall prohibit use of erosion control materials potentially harmful to Covered Species and other species, such as monofilament netting (erosion control matting) or similar material, in potential Covered Species' habitat.	ITP Condition # 6.9	Before commencing ground- or vegetation-disturbing activities/ Entire Project	Permittee	
7	Delineation of Property Boundaries. Before initiating any Covered Activities along each part of the route in active construction, Permittee shall clearly delineate the boundaries of the Project Area with fencing, stakes, or flags. Permittee shall restrict all Covered Activities to within the fenced, staked, or flagged areas. Permittee shall maintain all fencing, stakes, and flags until the completion of Covered Activities in that area.	ITP Condition # 6.10	Before commencing ground- or vegetation-disturbing activities/ Entire Project	Permittee	
8	Delineation of Habitat. Permittee shall clearly delineate habitat of the Covered Species within the Project Area with posted signs, posting stakes, flags, and/or rope or cord, and place fencing as necessary to minimize the disturbance of Covered Species' habitat.	ITP Condition # 6.11	Before commencing ground- or vegetation-disturbing activities/ Entire Project	Permittee	
9	Temporary Impact Criteria. For the purposes of this ITP, temporary impacts must meet the following criteria: (1) establishment and documentation of baseline conditions, including: absolute percentage of cover by plant species, vegetation heights, plant species composition, soil type, measure of soil compaction in each acre impacted, and small mammal burrow density per acre must be completed prior to any impacts occurring (see Condition of Approval 8.4 - Pre-Activity Documentation of Baseline Conditions), and (2) temporarily impacted areas must be restored to baseline conditions within 18 months of impacts occurring as a result of Covered Activities. Refer to Condition of Approval 9.2 (Restoration After Temporary Impacts) for restoration and monitoring requirements. Any area that does not meet these criteria that were categorized as temporary impacts shall be recategorized as long-term habitat conversion and the Permittee shall submit an amendment request to this ITP and provide additional compensatory mitigation.	ITP Condition # 6.17	Before commencing ground- or vegetation-disturbing activities/ Entire Project/ Post-Construction	Permittee	

	Mitigation Measure	Source	Implementation Schedule	Responsible Party	Status / Date / Initials
10	Roadside Curbs Design and Construction. Permittee shall provide CDFW with draft design plans for curbs on all roads, sidewalks and trails that will be installed as part of the Covered Activities at least 90 days prior to commencement of Covered Activities. Wherever possible, Permittee shall minimize the use of curbs or elevated margins that may serve as hard borders or separations between natural habitat and anthropogenic infrastructure. Curbs shall be designed to allow for volitional passage of the Covered Species. CDFW acceptance of the roadside curb designs shall be required prior to commencement of Covered Activities. CDFW shall provide written response to the Permittee within 30 calendar days of receipt of the curb designs. If no response is received from CDFW within 30 calendar days of submittal of the curb designs, the curb designs shall be considered as accepted by CDFW. Permittee shall construct roadside curbs according to the designs accepted by CDFW. The curb designs shall include, at minimum, the following design components: Curbs on the edge of any road, sidewalk or trail shall be slanted at no more than a 45-degree angle. Alternatively, slanted sections shall be provided at regular intervals of no more than 100 linear feet. Private driveways shall not serve as slanted sections unless they are flush with the street. Examples of curb designs may be found online at: https://dot.ca.gov/-/media/dot-media/programs/design/documents/locked-2023-std-plans-dor-a11y.pdf (see Sheet A87A). Curbs adjacent to storm drains shall be offset by a distance sufficient to allow volitional passage for the Covered Species around the storm drains.	ITP Condition # 6.19, 6.19.1-2	Before commencing ground- or vegetation-disturbing activities	Permittee	

11	Storm Water Infrastructure Designs and Construction. Permittee shall ensure that storm water-related infrastructure (e.g., storm drains, storm drain grates, v-ditches, catchment basins and detention basins) are designed and constructed in a manner that minimizes and avoids take of Covered Species to the maximum extent feasible. At least 90 days prior to commencement of Covered Activities, Permittee shall submit design plans and obtain written acceptance from CDFW confirming that the infrastructure incorporates design elements to avoid and reduce impacts to Covered Species prior to installation of such infrastructure to CDFW. CDFW shall provide written comments to Permittee within 30 calendar days of receipt of the storm drain designs. If no response is received from CDFW within 30 calendar days of submittal of the storm drain designs, the storm drain designs shall be considered accepted by CDFW. Permittee shall construct drop inlets or other storm drain infrastructure according to the designs accepted by CDFW. Storm drain grates shall be offset from any adjacent curb by a distance that will allow for volitional passage of the Covered Species to go around the grate, along the curb. Openings in storm drain grates shall be no more than 16 mm in width and shall be oriented perpendicular to the adjacent curb or walkway. V-ditches shall be designed so that their walls do not form an angle greater than 45° with the substrate, and shall have velocity breaks at regular intervals that will allow for refuge and volitional escape by the Covered Species. V-ditches shall not direct or lead the Covered Species into hazardous or terminal (dead-end) areas. Catchment basins shall be fitted with escape ramps or ladders that will allow the Covered Species to volitionally escape. Ramps and/or ladders shall be placed along a wall of the catchment basin and must span the distance from the lowest point in the basin (sump pit) to the grate covering. Escape ramps or ladders shall be fashioned from perforated metal sheeting covered with an open structured synthetic matting material that will allow for sufficient traction for the Covered Species to volitionally escape from the catchment basin if entrained. Alternatively, catchment basins shall be designed to have walls that are slanted outward and the walls shall be covered with open structured synthetic matting material together with an escape ramp or ladder that allows for volitional escape of the Covered Species. Detention basins shall be designed with exclusion fencing to prevent access by the Covered Species. The exclusion fencing shall be solid or opaque for at least 15 vertical inches from where it meets the substrate, and may consist of plastic, metal or other impermeable material that serves to block sensory access by the Covered Species and reduce take that may arise from “pacing” or “giving up” behavior. Vehicle entry/exit points of access to the detention basins shall have crossing structures installed (e.g., grated trenches) to prevent road mortality of the Covered Species. Detention basin outfall structures shall have one-way gates installed (e.g., flapper gates) or similar devices that will serve to prevent the Covered Species from entering the basin via the structure.	ITP Condition # 6.20, 6.20.1-9	Before commencing ground- or vegetation-disturbing activities	Permittee	

	Mitigation Measure	Source	Implementation Schedule	Responsible Party	Status / Date / Initials
12	Notification Before Commencement. The Designated Representative shall notify CDFW 14 calendar days before starting Covered Activities and shall document compliance with all pre-Project Conditions of Approval before starting Covered Activities.	ITP Condition # 7.1	Before commencing ground- or vegetation-disturbing activities	Permittee	
13	Pre-Activity Documentation of Baseline Conditions. Prior to Covered Activities and any impacts, Permittee shall submit to CDFW documentation of baseline conditions of the areas subject to temporary disturbance within the Project Area. The baseline documentation shall include absolute percentages of vegetative cover by plant species, which shall be quantified by the Qualified Biologist or Biological Monitor prior to Covered Activities. It shall also include vegetation heights, plant species composition, soil type, measure of soil compaction in each acre impacted, and small mammal burrow density per acre. This baseline report shall contain reference photographs at static points within the Project Area to be used for comparison to assess if impacts were temporary. Prior to commencement of Covered Activities, Permittee shall flag a minimum of six (6) vantage points that offer representative views of the Project Area, focusing on graded areas. Permittee shall photograph the areas from each of the flagged points, noting the direction and magnification of each photo. A reference key shall be submitted with the photos describing the location of the photo and the direction of the view.	ITP Condition # 8.4, 8.4.1	Before commencing ground- or vegetation-disturbing activities	Permittee	
14	Erosion Control. All erosion and sediment control measures shall be installed prior to implementing Covered Activities involving earth moving (e.g., grubbing, grading, excavation, trenching, backfilling, etc.). Permittee shall utilize erosion control measures throughout all phases of the Project where sediment runoff from exposed slopes could leave the Project Area and/or enter a stream or pond. Permittee, Designated Biologist, Biological Monitor, or other trained staff shall monitor erosion control measures before, during, and after each storm event and repair and/or replace ineffective measures immediately.	ITP Condition # 8.5	Before commencing ground- or vegetation-disturbing activities/ Entire Project	Permittee	
15	Pre-Activity Covered Species Surveys. The Designated Biologist shall survey potential habitat features, such as aquatic and upland areas, including refugia such as under shrubs, downed logs, woody debris, burrows, ruts and holes near root structures, etc. for the Covered Species prior to and during all clearing, grubbing and site grading. The surveys shall be performed for each Project phase. If vegetation or fossorial mammal burrows become reestablished in a previously disturbed area, then the Designated Biologist shall resurvey these areas prior to conducting Covered Activities to ensure Covered Species are not in harm's way. If the Designated Biologist(s) or anyone else discovers the Covered Species, the Designated Biologist shall move the animal to a safe location nearby (e.g. the mouth of a ground squirrel burrow outside of the temporary exclusion barrier) as described in Condition of Approval 8.17 (Covered Species Relocation Plan).	ITP Condition # 8.13	Before commencing ground- or vegetation-disturbing activities/ Entire Project	Permittee	

16	Temporary Exclusion Barrier. At least 30 days prior to the initiation of Covered Activities on each Project phase, the Permittee shall submit to CDFW for written approval plans for an exclusion fencing system to block Covered Species from entering the work areas, and access routes as appropriate. If the Project is phased, the Permittee shall submit to CDFW for written approval plans for an exclusion fencing system, prior to the upcoming active phase. CDFW has 30 days to respond to each submission of plans, including resubmission of plans that are revised at the request of CDFW. The plans shall include a map indicating location of exclusion fencing in relation to the Project Area, the Project phase that will be constructed (if applicable), location of Covered Species habitat features, dimension specifications, and a description of fencing materials. Permittee shall be responsible for implementation and upkeep of the fencing system. In addition, the following criteria for the exclusion fencing system shall be met: If the initial site grading is not completed over the entire Project Area prior to the end of the first construction season per Condition of Approval 8.1 (Seasonal Work Window Restriction), then the temporary exclusion barrier shall be installed between any ungraded portions of the Project Area and the graded portions of the Project Area. The temporary barrier may be adjusted as Covered Activities continue as described in Condition of Approval 8.14 (Temporary Exclusion Barrier), if approved by CDFW. The exclusion fencing shall consist of material appropriate for exclusion of Covered Species. The exclusion fencing shall either measure at least 36 inches tall above the soil surface or be of an appropriate height for exclusion of the Covered Species. The Designated Biologist, Biological Monitor, or trained Construction Monitor shall inspect the fencing and gates immediately after every rain event to ensure it maintains structural integrity. Holes or burrows which appear to extend under the fencing will be blocked inside the fence line to prevent the Covered Species from accessing work areas. The bottom of the exclusion fencing shall not allow wildlife to pass through gaps or holes with the bottom of the fencing buried six inches below grade. The exclusion fencing shall be taut between the supporting stakes and shall have the supporting stakes oriented on the inside edge towards the development areas. The exclusion fencing shall feature coverboards inside and outside the perimeter placed at 100-foot intervals and one-way escape doors or an appropriate design for preventing Covered Species and wildlife from being trapped. Gates in exclusion fencing must be maintained such that they remain closed when vehicles or personnel are not moving through them, and they must be maintained in good repair. Gates shall be repaired immediately upon discovery of damage. The fencing and coverboards shall be inspected every morning for trapped Covered Species for the Project's duration. Any trapped wildlife found in the Project Area under a cover board or along the fencing will be photographed and reported immediately to the Designated Biologist. If the Designated Biologist determines that the trapped wildlife is the Covered Species, they shall temporarily stop all Covered Activities that threaten harm and notify CDFW immediately. During periods when the Covered Species is likely to be migrating above-ground, the daily fence check will be conducted by the Designated Biologist or Biological Monitor. These daily inspection periods by the Designated Biologist include the period from the first major rain event of the season that produces 0.2-inch of precipitation or greater through March 15 when Covered Species adults are likely to be migrating from subterranean refugia to breeding ponds and back	ITP Condition # 8.15, 8.15.1-12	Before commencing ground- or vegetation-disturbing activities/ Entire Project	Permittee	

	Mitigation Measure	Source	Implementation Schedule	Responsible Party	Status / Date / Initials
	to their refugia, and again from May 1 through August 31 when metamorphs are dispersing from their natal ponds, and any time of the year on mornings following any rain event greater than 0.1 inch, when adults may be migrating to their breeding ponds. If a California tiger salamander is encountered during these inspections, and is in danger of being harmed, then the Designated Biologist shall temporarily stop all activities that threaten harm, remove the animal from the area, and relocate it to the pre-approved location as described in the Covered Species Relocation Plan (Condition of Approval 8.17). If fencing becomes damaged, it will be immediately repaired upon detection and the Designated Biologist or Biological Monitor shall stop work in the vicinity of the fencing as needed to ensure that no California tiger salamanders have entered the construction area. Fencing system entry/exit points for vehicular and pedestrian traffic shall be constructed so wildlife cannot access the area under active construction during non-work hours. The Designated Biologist shall inspect the Project Area prior to installation of the exclusion fencing. The exclusion fencing system shall remain in place until all Covered Activities have been completed. All components of the exclusion fencing will be removed for storage or disposal off-site immediately upon completion of Covered Activities. All vegetation slated for removal in the exclusion fencing buffer area shall be inspected by a Designated Biologist prior to the initiation of removal. Exclusion fencing shall be inspected daily by the Designated Biologist, Biological Monitor, or trained Construction Monitor and repaired as necessary, including inspection of coverboards and replacement of wetted sponges as necessary to minimize wildlife distress.				
17	Habitat Management Land Acquisition and Restoration: CDFW has determined that permanent protection and perpetual management of compensatory habitat is necessary and required pursuant to CESA to fully mitigate Project-related impacts of the taking on the Covered Species that will result from implementation of the Covered Activities. This determination is based on factors including an assessment of the importance of the habitat in the Project Area, the extent to which the Covered Activities will impact the habitat, and CDFW's estimate of the protected acreage required to provide for adequate compensation. To meet this requirement, the Permittee shall either purchase 144.5 acres of Covered Species credits from a CDFW-approved mitigation or conservation bank pursuant to Condition of Approval 9.3 (Covered Species Credits) below OR shall provide for both the permanent protection and management of 144.5 acres of Habitat Management (HM) lands pursuant to Condition of Approval 9.4 (Habitat Management Lands Acquisition and Protection) below and the calculation and deposit of the management funds pursuant to Condition of Approval 9.5 (Endowment Fund) below. Purchase of Covered Species credits OR permanent protection and funding for perpetual management of HM lands must be complete before starting Covered Activities, or within 30 months of the effective date of this ITP if Security is provided pursuant to Condition of Approval 10 (Security) below for all uncompleted obligations. The Permittee shall also restore on-site 11 acres of temporarily impacted Covered Species habitat pursuant to Condition of Approval 9.2 (Restoration after Temporary Impacts) below.	ITP Condition # 9	Before commencing ground- or vegetation-disturbing activities (or within 30 months of issuance of the ITP if Security is provided).	Permittee	

	Mitigation Measure	Source	Implementation Schedule	Responsible Party	Status / Date / Initials
18	Cost Estimates. For the purposes of determining the Security amount, CDFW has estimated the cost sufficient for CDFW or its contractors to complete acquisition, protection, and perpetual management of the HM lands and restoration of temporarily disturbed habitat as follows: Land acquisition costs for HM lands identified in Condition of Approval 9.4 (Habitat Management Lands Acquisition and Protection) below, estimated at $25,000/acre for 144.5 acres: $3,612,500.00 Land acquisitions costs are estimated using local fair market current value per acre for lands with habitat values meeting mitigation requirements; Start-up costs for HM lands, including initial site protection and enhancement costs as described in Condition of Approval 9.4.6 (Start-Up Activities) below, estimated at $177,392.00. Interim management period funding as described in Condition of Approval 9.4.7 (Interim Management (Initial and Capital)) below, estimated at $405,100; Long-term management funding as described in Condition of Approval 9.5 (Endowment Fund) below, estimated at $7,106.37 per acre for 144.5 acres: $1,026,870. Long-term management funding is estimated initially for the purpose of providing Security to ensure implementation of HM lands management. Related transaction fees including but not limited to account set-up fees, administrative fees, title and documentation review and related title transactions, expenses incurred from other state agency reviews, and overhead related to transfer of HM lands to CDFW as described in Condition of Approval 9.6 (Reimburse CDFW), estimated at $3,000. Restoration of on-site temporary effects to Covered Species habitat as described in Conditions of Approval 6.17 (Temporary Impact Criteria) and 9.2 (Restoration after Temporary Impacts), calculated at $15,000/acre for 11 acres: $165,000. All costs associated with CDFW engaging an outside contractor to complete the mitigation tasks, including but not limited to acquisition, protection, and perpetual funding and management of the HM lands and restoration of temporarily disturbed habitat. These costs include but are not limited to the cost of issuing a request for proposals, transaction costs, contract administration costs, and costs associated with monitoring the contractor's work $40,000.00.	ITP Condition # 9.1, 9.1.1-7	Before commencing ground- or vegetation-disturbing activities (or within 30 months of issuance of the ITP if Security is provided).	Permittee	
19	Covered Species Credits. If the Permittee elects to purchase Covered Species credits to complete compensatory mitigation obligations, then Permittee shall purchase 144.5 acres of Covered Species credits from a CDFW-approved mitigation or conservation bank prior to initiating Covered Activities, or no later than 30 months from the issuance of this ITP if Security is provided pursuant to Condition of Approval 10 below. Prior to purchase of Covered Species credits, Permittee shall obtain CDFW approval to ensure the mitigation or conservation bank is appropriate to compensate for the impacts of the Project. Permittee shall submit to CDFW a copy of the Bill of Sale(s) and Payment Receipt prior to initiating Covered Activities or within 30 months from issuance of this ITP if Security is provided.	ITP Condition # 9.3	Before commencing ground- or vegetation-disturbing activities (or within 30 months of issuance of the ITP if Security is provided).	Permittee	

	Mitigation Measure	Source	Implementation Schedule	Responsible Party	Status / Date / Initials
20	Habitat Management Lands Acquisition and Protection. If the Permittee elects to provide for the acquisition, permanent protection, and perpetual management of HM lands to complete compensatory mitigation obligations, then the Permittee shall complete the following:	ITP Condition # 9.4	Before commencing ground- or vegetation-disturbing activities (or within 30 months of issuance of the ITP if Security is provided).	Permittee	
21	Fee Title. Transfer fee title of the HM lands to CDFW pursuant to terms approved in writing by CDFW. Alternatively, CDFW, in its sole discretion, may authorize a governmental entity, special district, non-profit organization, for-profit entity, person, or another entity to hold title to and manage the property provided that the district, organization, entity, or person meets the requirements of Government Code sections 65965-65968, as amended.	ITP Condition # 9.4.1	Before commencing ground- or vegetation-disturbing activities (or within 30 months of issuance of the ITP if Security is provided).	Permittee	
22	Conservation Easement. If CDFW does not hold fee title to the HM lands, CDFW shall act as grantee for a conservation easement over the HM lands or shall, in its sole discretion, approve a non-profit entity, public agency, or Native American tribe to act as grantee for a conservation easement over the HM lands provided that the entity, agency, or tribe meets the requirements of Civil Code section 815.3. If CDFW elects not to be named as the grantee for the conservation easement, CDFW shall be expressly named in the conservation easement as a third-party beneficiary. The Permittee shall obtain CDFW written approval of any conservation easement before its execution or recordation. No conservation easement shall be approved by CDFW unless it complies with Civil Code sections 815-816, as amended, and Government Code sections 65965-65968, as amended and includes provisions expressly addressing Government Code sections 65966(j) and 65967(e). Because the “doctrine of merger” could invalidate the conservation interest, under no circumstances can the fee title owner of the HM lands serve as grantee for the conservation easement.	ITP Condition # 9.4.2	Before commencing ground- or vegetation-disturbing activities (or within 30 months of issuance of the ITP if Security is provided).	Permittee	
23	HM Lands Approval. Obtain CDFW written approval of the HM lands before acquisition and/or transfer of the land by submitting, at least three months before acquisition and/or transfer of the HM lands, documentation identifying the land to be purchased or property interest conveyed to an approved entity as mitigation for the Project’s impacts on Covered Species;	ITP Condition # 9.4.3	Before commencing ground- or vegetation-disturbing activities (or within 30 months of issuance of the ITP if Security is provided).	Permittee	
24	HM Lands Documentation. Provide a recent preliminary title report, Phase I Environmental Site Assessment, and other necessary documents (please contact CDFW for document list). All documents conveying the HM lands and all conditions of title are subject to the approval of CDFW, and if applicable, the Wildlife Conservation Board and the Department of General Services;	ITP Condition # 9.4.4	Before commencing ground- or vegetation-disturbing activities (or within 30 months of issuance of the ITP if Security is provided).	Permittee	

	Mitigation Measure	Source	Implementation Schedule	Responsible Party	Status / Date / Initials
25	Land Manager. Designate both an interim and long-term land manager approved by CDFW. The interim and long-term land managers may, but need not, be the same. The interim and/or long-term land managers may be the landowner or another party. Documents related to land management shall identify both the interim and long-term land managers. Permittee shall notify CDFW of any subsequent changes in the land manager within 30 days of the change. If CDFW will hold fee title to the mitigation land, CDFW will also act as both the interim and long-term land manager unless otherwise specified. The grantee for the conservation easement cannot serve as the interim or long-term manager without the express written authorization of CDFW in its sole discretion.	ITP Condition # 9.4.5	Before commencing ground- or vegetation-disturbing activities (or within 30 months of issuance of the ITP if Security is provided).	Permittee	
26	Start-up Activities. Provide for the implementation of start-up activities, including the initial site protection and enhancement of HM lands, once the HM lands have been approved by CDFW. Start-up activities include, at a minimum: (1) preparing a final management plan for CDFW approval (see https://nrm.dfg.ca.gov/FileHandler.ashx?DocumentID=137386&inline); (2) conducting a baseline biological assessment and land survey report within four months of recording or transfer, this assessment is separate from any baseline reports required for CDFW evaluation of HM Lands proposals; (3) developing and transferring Geographic Information Systems (GIS) data if applicable; (4) establishing initial fencing; (5) conducting litter removal; (6) conducting initial habitat restoration or enhancement, if applicable; and (7) installing signage;	ITP Condition # 9.4.6	Before commencing ground- or vegetation-disturbing activities (or within 30 months of issuance of the ITP if Security is provided).	Permittee	
27	Interim Management (Initial and Capital). Provide for the interim management of the HM lands. The Permittee shall ensure that the interim land manager implements the interim management of the HM lands as described in the final management plan and conservation easement approved by CDFW. The interim management period shall be a minimum of three years from the date of HM land acquisition and protection and full funding of the Endowment and includes expected management following start-up activities. Interim management period activities described in the final management plan shall include fence repair, continuing trash removal, site monitoring, vegetation and invasive species management, and monitoring reports. Permittee shall either (1) provide Security to CDFW for the minimum of three years of interim management that the land owner, Permittee, or land manager agrees to manage and pay for at their own expense, (2) establish an escrow account with written instructions approved in advance in writing by CDFW to pay the land manager annually in advance, or (3) establish a short-term enhancement account with CDFW or a CDFW-approved entity for payment to the land manager.	ITP Condition # 9.4.7	Before commencing ground- or vegetation-disturbing activities (or within 30 months of issuance of the ITP if Security is provided).	Permittee	

	Mitigation Measure	Source	Implementation Schedule	Responsible Party	Status / Date / Initials
28	Endowment Fund. If the Permittee elects to provide for the acquisition, permanent protection, and perpetual management of HM lands to complete compensatory mitigation obligations, then the Permittee shall ensure that the HM lands are perpetually managed, maintained, and monitored by the long-term land manager as described in this ITP, the conservation easement, and the final management plan approved by CDFW. After obtaining CDFW approval of the HM lands, Permittee shall provide long-term management funding for the perpetual management of the HM lands by establishing a long-term management fund (Endowment). The Endowment is a sum of money, held in a CDFW-approved fund that is permanently restricted to paying the costs of 1) long-term management and 2) stewardship of the mitigation property for which the funds were set aside, which costs include the perpetual management, maintenance, monitoring, and other activities on the HM lands consistent with this ITP, the conservation easement, and the management plan required by Condition of Approval 9.4.5 (Land Manager). Endowment as used in this ITP shall refer to the endowment deposit and all interest, dividends, other earnings, additions and appreciation thereon. The Endowment shall be governed by this ITP, Government Code sections 65965-65968, as amended, and Probate Code sections 18501-18510, as amended. After the interim management period, Permittee shall ensure that the designated long-term land manager implements the management and monitoring of the HM lands according to the final management plan. The long-term land manager shall be obligated to manage and monitor the HM lands in perpetuity to preserve their conservation values in accordance with this ITP, the conservation easement, and the final management plan. Such activities shall be funded through the Endowment.	ITP Condition # 9.5	Before commencing ground- or vegetation-disturbing activities (or within 30 months of issuance of the ITP if Security is provided).	Permittee	
29	Identify an Endowment Manager. The Endowment shall be held by the Endowment Manager, which shall be either CDFW or another entity qualified pursuant to Government Code sections 65965-65968, as amended. Permittee shall submit to CDFW a written proposal that includes: (i) the name of the proposed Endowment Manager; (ii) whether the proposed Endowment Manager is a governmental entity, special district, nonprofit organization, community foundation, or congressionally chartered foundation; (iii) whether the proposed Endowment Manager holds the property or an interest in the property for conservation purposes as required by Government Code section 65968(b)(1) or, in the alternative, the basis for finding that the Project qualifies for an exception pursuant to Government Code section 65968(b)(2); and (iv) a copy of the proposed Endowment Manager's certification pursuant to Government Code section 65968(e). Within thirty (30) days of CDFW's receipt of Permittee's written proposal, CDFW shall inform Permittee in writing if it determines the proposal does not satisfy the requirements of Fish and Game Code section 2081(b)(3) and, if so, shall provide Permittee with a written explanation of the reasons for its determination. If CDFW does not provide Permittee with a written determination within the thirty-day period, the proposal shall be deemed consistent with Section 2081(b)(3).	ITP Condition # 9.5.1	Before commencing ground- or vegetation-disturbing activities (or within 30 months of issuance of the ITP if Security is provided).	Permittee	

	Mitigation Measure	Source	Implementation Schedule	Responsible Party	Status / Date / Initials
30	Calculate the Endowment Funds Deposit. After obtaining CDFW written approval of the HM lands, long-term management plan, and Endowment Manager, Permittee shall prepare an endowment assessment (equivalent to a Property Analysis Record (PAR)) to calculate the amount of funding necessary to ensure the long-term management of the HM lands (Endowment Deposit Amount). Note that the endowment for the easement holder should not be included in this calculation. The Permittee shall submit to CDFW for review and approval the results of the endowment assessment before transferring funds to the Endowment Manager.	ITP Condition # 9.5.2	Before commencing ground- or vegetation-disturbing activities (or within 30 months of issuance of the ITP if Security is provided).	Permittee	
31	Capitalization Rate and Fees. Permittee shall obtain the capitalization rate from the selected Endowment Manager for use in calculating the endowment assessment and adjust for any additional administrative, periodic, or annual fees.	ITP Condition # 9.5.2.1	Before commencing ground- or vegetation-disturbing activities (or within 30 months of issuance of the ITP if Security is provided).	Permittee	
32	Endowment Buffers/Assumptions. Permittee shall include in the endowment assessment assumptions the following buffers for endowment establishment and use that will substantially ensure long-term viability and security of the Endowment:	ITP Condition # 9.5.2.2	Before commencing ground- or vegetation-disturbing activities (or within 30 months of issuance of the ITP if Security is provided).	Permittee	
33	10 Percent Contingency. A 10 percent contingency shall be added to each endowment calculation to hedge against underestimation of the fund, unanticipated expenditures, inflation, or catastrophic events.	ITP Condition # 9.5.2.2.1	Before commencing ground- or vegetation-disturbing activities (or within 30 months of issuance of the ITP if Security is provided).	Permittee	
34	Three Years Delayed Spending. The endowment shall be established assuming spending will not occur for the first three years after full funding.	ITP Condition # 9.5.2.2.2	Before commencing ground- or vegetation-disturbing activities (or within 30 months of issuance of the ITP if Security is provided).	Permittee	
35	Non-Annualized Expenses. For all large capital expenses to occur periodically but not annually such as fence replacement or well replacement, payments shall be withheld from the annual disbursement until the year of anticipated need or upon request to Endowment Manager and CDFW.	ITP Condition # 9.5.2.2.3	Before commencing ground- or vegetation-disturbing activities (or within 30 months of issuance of the ITP if Security is provided).	Permittee	

	Mitigation Measure	Source	Implementation Schedule	Responsible Party	Status / Date / Initials
36	Transfer Long-term Endowment Funds. Permittee shall transfer the long-term endowment funds to the Endowment Manager upon CDFW approval of the Endowment Deposit Amount identified above.	ITP Condition # 9.5.3	Before commencing ground- or vegetation-disturbing activities (or within 30 months of issuance of the ITP if Security is provided).	Permittee	
37	Management of the Endowment. The approved Endowment Manager may pool the Endowment with other endowments for the operation, management, and protection of HM lands for local populations of the Covered Species but shall maintain separate accounting for each Endowment. The Endowment Manager shall, at all times, hold and manage the Endowment in compliance with this ITP, Government Code sections 65965-65968, as amended, and Probate Code sections 18501-18510, as amended. Notwithstanding Probate Code sections 18501-18510, the Endowment Manager shall not make any disbursement from the Endowment that will result in expenditure of any portion of the principal of the endowment without the prior written approval of CDFW in its sole discretion. Permittee shall ensure that this requirement is included in any agreement of any kind governing the holding, investment, management, and/or disbursement of the Endowment funds. Notwithstanding Probate Code sections 18501-18510, if CDFW determines in its sole discretion that an expenditure needs to be made from the Endowment to preserve the conservation values of the HM lands, the Endowment Manager shall process that expenditure in accordance with directions from CDFW. The Endowment Manager shall not be liable for any shortfall in the Endowment resulting from CDFW's decision to make such an expenditure.	ITP Condition # 9.5.4	Before commencing ground- or vegetation-disturbing activities (or within 30 months of issuance of the ITP if Security is provided).	Permittee	
38	Reimburse CDFW. Permittee shall reimburse CDFW for all reasonable costs incurred by CDFW related to issuance and monitoring of this ITP, including, but not limited to transaction fees, account set-up fees, administrative fees, title and documentation review and related title transactions, costs incurred from other state agency reviews, and overhead related to transfer of HM lands to CDFW.	ITP Condition # 9.6	Before commencing ground- or vegetation-disturbing activities (or within 30 months of issuance of the ITP if Security is provided).	Permittee	

39	Security: The Permittee may proceed with Covered Activities only after the Permittee has ensured funding (Security) to complete any activity required by Condition of Approval 9 (Habitat Management Land Acquisition and Restoration) that has not been completed before Covered Activities begin. Permittee shall provide Security as follows: Security Amount. The Security shall be in the amount of $5,429,862.005 or in the amount identified in 9.15 (Cost Estimates) specific to the obligation that has not been completed. This amount5 is determined by CDFW based on the cost estimates identified in Condition of Approval 9.15 (Cost Estimates) above, sufficient for CDFW or its contractors to complete land acquisition, property enhancement, startup costs, initial management, long-term management, and monitoring. Security Form. The Security shall be in the form of an irrevocable letter of credit (see Attachment 3) or another form of Security approved in advance in writing by CDFW's Office of the General Counsel. Security Timeline. The Security shall be provided to CDFW for review and approval at least 90 days before Covered Activities begin. The Security shall be provided to CDFW at least 30 days before Covered Activities begin. Security Holder. The Security shall be held by CDFW or in a manner approved in advance in writing by CDFW. Security Transmittal. Permittee shall transmit it to CDFW with a completed Mitigation Payment Transmittal Form (see Attachment 4) or by way of an approved instrument such as an escrow agreement, irrevocable letter of credit, or other. Security Drawing. The Security shall allow CDFW to draw on the principal sum if CDFW, in its sole discretion, determines that the Permittee has failed to comply with the Conditions of Approval of this ITP. Security Release. The Security (or any portion of the Security then remaining) shall be released to the Permittee after CDFW has conducted an on-site inspection and received confirmation that all secured requirements have been satisfied, as evidenced by: For Credit Purchase: • Copy of Bill of Sale(s) and Payment Receipt(s) or Credit Transfer Agreement for the purchase of Covered Species credits; and • Timely submission of all required reports. AND/OR: For Habitat Management Land Acquisition (HMLA): • Written documentation of the acquisition of the HM lands; • Copies of all executed and recorded conservation easements; • Written confirmation from the approved Endowment Manager of its receipt of the full Endowment; and • Timely submission of all required reports. Even if Security is provided, the Permittee must complete the required acquisition, protection	ITP Condition # 10, 10.1-10.7	Before commencing ground- or vegetation-disturbing activities (or within 30 months of issuance of the ITP if Security is provided).	Permittee	

	Mitigation Measure	Source	Implementation Schedule	Responsible Party	Status / Date / Initials
	and transfer of all HM lands and record any required conservation easements no later than 30 months from the effective date of this ITP. CDFW may require the Permittee to provide additional HM lands and/or additional funding to ensure the impacts of the taking are minimized and fully mitigated, as required by law, if the Permittee does not complete these requirements within the specified timeframe.				
	DURING CONSTRUCTION				
40	Designated Biologist Authority. To ensure compliance with the Conditions of Approval of this ITP, the Designated Biologist(s) shall immediately stop any activity that does not comply with this ITP and/or order any reasonable measure to avoid the unauthorized take of an individual of the Covered Species. Permittee shall provide unfettered access to the Project Area and otherwise facilitate the Designated Biologist(s) in the performance of their duties. If a Designated Biologist is unable to comply with the ITP, then the Designated Biologist shall notify the CDFW Representative immediately. Permittee shall not enter into any agreement or contract of any kind, including but not limited to non-disclosure agreements and confidentiality agreements, with its contractors and/or the Designated Biologist(s) and Biological Monitor(s), that prohibit or impede open communication with CDFW, including but not limited to providing CDFW staff with the results of any surveys, reports, or studies, or notifying CDFW of any non-compliance or take. Failure to notify CDFW of any non-compliance or take or injury of a Covered Species as a result of such agreement or contract may result in CDFW taking actions to prevent or remedy a violation of this ITP.	ITP Condition # 6.3	Entire Project		
41	Construction Monitoring Documentation. The Designated Biologist(s) and Biological Monitor(s) shall maintain construction-monitoring documentation on-site in either hard copy or digital format throughout the construction period, which shall include a copy of this ITP with attachments and a list of signatures of all personnel who have successfully completed the education program. Permittee shall ensure a copy of the construction-monitoring documentation is available for review at the Project Area upon request by CDFW.	ITP Condition # 6.6	Entire Project	Permittee	
42	Dust Control. Permittee shall implement dust control measures during Covered Activities to facilitate visibility for monitoring of the Covered Species by the Designated Biologist(s). Permittee shall keep the amount of water used to the minimum amount needed and shall not allow water to form puddles.	ITP Condition # 6.8	Entire Project	Permittee	

	Mitigation Measure	Source	Implementation Schedule	Responsible Party	Status / Date / Initials
43	Project Access. Project-related personnel shall access the Project Area using existing routes, and shall not cross Covered Species' habitat outside of or en route to the Project Area. Project access is limited to areas within the Project Area that are authorized for Covered Activities only. Permittee shall restrict Project-related vehicle traffic to established roads, staging, and parking areas. Permittee shall ensure that vehicle speeds do not exceed 15 miles per hour to avoid Covered Species on or traversing the roads. If Permittee determines construction of routes for travel is necessary within Covered Species' habitat within the Project Area and outside of established roadways and parking areas, the Designated Representative shall contact CDFW for written approval before carrying out such an activity. CDFW may require an amendment to this ITP, among other reasons, if additional take of Covered Species will occur as a result of the Project modification.	ITP Condition # 6.12	Entire Project	Permittee	
44	Staging Areas. Permittee shall confine all Project-related parking, storage areas, laydown sites, equipment storage, and any other surface-disturbing activities to the Project Area using, to the extent possible, previously disturbed areas. Additionally, Permittee shall not use or cross Covered Species' habitat outside of the marked Project Area unless provided for as described in Condition of Approval 6.12 (Project Access) of this ITP.	ITP Condition # 6.13	Entire Project	Permittee	
45	Hazardous Waste. Permittee shall immediately stop and, pursuant to pertinent state and federal statutes and regulations, arrange for repair and clean up by qualified individuals of any fuel or hazardous waste leaks or spills at the time of occurrence, or as soon as it is safe to do so. Permittee shall exclude the storage and handling of hazardous materials from the Project Area and shall properly contain and dispose of any unused or leftover hazardous products off-site.	ITP Condition # 6.14	Entire Project	Permittee	
46	CDFW Access. Permittee shall provide CDFW staff with reasonable access to the Project and mitigation lands under Permittee control, and shall otherwise fully cooperate with CDFW efforts to verify compliance with or effectiveness of mitigation measures set forth in this ITP.	ITP Condition # 6.15	Entire Project	Permittee	
47	Notification of Non-compliance. The Designated Representative shall immediately notify CDFW if the Permittee is not in compliance with any Condition of Approval of this ITP, including but not limited to any actual or anticipated failure to implement measures within the time periods indicated in this ITP and/or the MMRP. The Designated Representative shall follow up within 24 hours with a written report to CDFW describing, in detail, any non-compliance with this ITP and suggested measures to remedy the situation.	ITP Condition # 7.2	Entire Project	Permittee	

	Mitigation Measure	Source	Implementation Schedule	Responsible Party	Status / Date / Initials
48	Compliance Monitoring. The Designated Biologist(s) or Biological Monitor(s) shall be on-site daily whenever Covered Activities are occurring. The Designated Biologist(s) or Biological Monitor(s) shall conduct compliance inspections to: (1) minimize incidental take of the Covered Species; (2) prevent unlawful take of species; (3) check for compliance with all measures of this ITP; (4) obtain photo documentation of Project Area conditions; (5) check all exclusion zones; and (6) ensure that signs, stakes, and fencing are intact, and that Covered Activities are only occurring in the Project Area. The Designated Representative or Designated Biologist(s) shall prepare daily written observation and inspection records summarizing oversight activities and compliance inspections, observations of Covered Species and their sign, survey results, dates of Covered Activity inactivity, and monitoring activities required by this ITP. Daily compliance inspections by the Designated Biologist or Biological Monitor may be reduced to a minimum of one day per week only for each phase of the Project after Permittee obtains written approval from CDFW per Condition of Approval 7.4 (Monthly Compliance Monitoring).	ITP Condition # 7.3	Entire Project	Permittee	
49	Monthly Compliance Monitoring. During periods of inactivity or after clearing, grubbing, and grading are completed and an exclusion fence is installed, compliance inspections by the Designated Biologist may be reduced to a minimum of one day per week only after Permittee obtains written approval from CDFW. Monthly monitoring forms shall be submitted to CDFW on a monthly basis to document information required in Condition of Approval 7.3 (Compliance Monitoring) and if the Covered Species was encountered, wildlife observations, and any other pertinent information. Daily compliance inspections shall resume if the Designated Biologist or CDFW finds the Permittee is out of compliance with any conditions of this ITP including the failure to maintain the exclusion fencing.	ITP Condition # 7.4	Entire Project	Permittee	

	Mitigation Measure	Source	Implementation Schedule	Responsible Party	Status / Date / Initials
50	Monthly Compliance Report. The Designated Representative or Designated Biologist shall compile the observation and inspection records identified in Condition of Approval 7.3 (Compliance Monitoring) into a Monthly Compliance Report and submit it to CDFW along with a copy of the MMRP table with notes showing the current implementation status of each mitigation measure. Monthly Compliance Reports shall be submitted to the CDFW offices listed in the Notices section of this ITP and via e-mail to CDFW's Bay Delta Region Regional Representative and Headquarters CESA Program. At the time of this ITP's approval, the CDFW Regional Representative is Andrea Boertien (Andrea.Boertien@wildlife.ca.gov) and Headquarters CESA Program email is CESA@wildlife.ca.gov. CDFW may at any time increase the timing and number of compliance inspections and reports required under this provision depending upon the results of previous compliance inspections. If CDFW determines the reporting schedule must be changed, CDFW will notify Permittee in writing of the new reporting schedule.	ITP Condition # 7.5	Entire Project	Permittee	
51	Annual Status Report. Permittee shall provide CDFW with an Annual Status Report (ASR) no later than January 31 of every year beginning with issuance of this ITP and continuing until CDFW accepts the Final Mitigation Report identified below. Each ASR shall include, at a minimum: (1) a summary of all Monthly Compliance Reports for that year identified in Condition of Approval 7.5 (Monthly Compliance Report); (2) a general description of the status of the Project Area and Covered Activities, including actual or projected completion dates, if known; (3) a copy of the table in the MMRP with notes showing the current implementation status of each mitigation measure; (4) a monitoring report including revegetation success criteria for temporary impacts per Condition of Approval 9.2 (Restoration After Temporary Impacts), if the success criteria were met or not, and a mitigation proposal if success criteria were not met, (5) an assessment of the effectiveness of each completed or partially completed mitigation measure in avoiding, minimizing and mitigating Project impacts; (6) all available information about Project-related incidental take of the Covered Species; (7) an accounting of the number of acres subject to both temporary and permanent disturbance, both for the prior calendar year, and a total since ITP issuance; and (8) information about other Project impacts on the Covered Species.	ITP Condition # 7.6	Entire Project	Permittee	
52	CNDDB Observations. The Designated Biologist shall submit all observations of Covered Species to CDFW's California Natural Diversity Database (CNDDB) within 15 working days of the observation and the Designated Biologist shall include copies of the submitted forms with the next Monthly Compliance Report or ASR, whichever is submitted first relative to the observation.	ITP Condition # 7.7	Entire Project	Permittee	

	Mitigation Measure	Source	Implementation Schedule	Responsible Party	Status / Date / Initials
53	Development Area Lighting. All lighting shall be designed so that exterior light fixtures are hooded, with lights directed downward or toward the area to be illuminated, with little to no horizontal spread, as low to the ground as feasible and so that backscatter to the nighttime sky is minimized. The design of the lighting will be such that the luminescence or light sources are shielded to prevent light trespass outside the Development Area boundary and neither the lamp nor the reflector interior surface would be visible from outside the footprint of the Development Area except for public roadways. Only narrow spectrum bulbs shall be used to limit the range of species affected by lighting. All lighting shall be of minimum necessary brightness consistent for worker safety. The number of lighting fixtures on buildings and roadways shall be limited to the minimum required by the City of Antioch.	ITP Condition # 6.18	Entire Project	Permittee	
54	Notification of Take or Injury. Permittee shall immediately notify the Designated Biologist(s) if a Covered Species is taken or injured by a Project-related activity, or if a Covered Species is otherwise found dead or injured within the vicinity of the Project. The Designated Biologist or Designated Representative shall provide immediate initial notification to the CDFW Regional Representative via e-mail and telephone, to discuss next steps. The initial notification to CDFW shall include information regarding the location, species, and number of animals taken or injured and the ITP Number. Following initial notification, Permittee shall send CDFW a written report within three (3) calendar days. The report shall include the date and time of the finding or incident, location of the animal or carcass, number of animals taken or injured, ITP Number, and if possible, provide a photograph, explanation as to cause of take or injury, and any other pertinent information. See Condition of Approval 8.17 (Covered Species Injury).	ITP Condition # 7.9	Entire Project	Permittee	
55	Seasonal Work Window Restriction. Covered Activities shall occur during the Covered Species non-breeding season, between June 15 and October 15. Covered Activities that occur within the creek and its associated riparian corridor shall only occur within the seasonal work window; the creek area and riparian corridor shall be protected with exclusion fencing. Clearing, grubbing, grading, and other Covered Activities outside of the creek and associated riparian corridor may occur year-round, within exclusion fencing, if Permittee provides clear documentation by October 15th annually, that 1) erosion control measures are in place per Condition of Approval 8.5 (Erosion Control) , and 2) temporary exclusion fencing (see Condition 8.15, Temporary Exclusion Barrier) is currently functional and has been continuously maintained throughout the term of the ITP. Work may be authorized outside of the work period and extended on a weekly or day-to-day basis by CDFW. Permittee shall submit a written request for work period variance to CDFW Environmental Scientist Andrea Boertien, at Andrea.Boertien@wildlife.ca.gov. The work period variance request shall: (1) describe the extent of the work already completed; (2) detail the activities that remain to be completed; (3) detail the time required to complete each of the remaining activities; (4) provide photographs of both the current work completed and the proposed site for continued work; and (5) include a National Weather Service 7-day forecast showing precipitation and nightly temperature lows for the variance period; and (6) include an assessment of additional biological impacts as a result of the work extension. An extension of the work period may require an Amendment if additional impacts to Covered Species will occur.	ITP Condition # 8.1	Entire Project	Permittee	

	Mitigation Measure	Source	Implementation Schedule	Responsible Party	Status / Date / Initials
56	Daily Work Window Restriction. All Covered Activities shall terminate 30 minutes before sunset and shall not resume until 30 minutes after sunrise unless otherwise approved by the Designated Biologist. Permittee shall use sunrise and sunset times established by the U.S. Naval Observatory Astronomical Applications Department for the geographic area (https://gml.noaa.gov/grad/solcalc/) to identify when Covered Activities shall terminate and resume. All lighting shall be turned off 30 minutes prior to sunset, unless required for safety or security purposes.	ITP Condition # 8.2	Entire Project	Permittee	
57	Wet Weather Work Restriction. Work within the Project Area shall be restricted to periods of low rainfall (less than 0.1-inch per 24-hour period). Covered Activities shall cease and all associated erosion control measures shall be in place at least 12 hours prior to the onset of precipitation. No work shall occur during a precipitation event. Covered Activities halted due to precipitation may resume when precipitation ceases, the National Weather Service 72-hour weather forecast indicates a 30% or less chance of precipitation, and after a dry-out period of 48 hours for rain events (i.e., 0.25-inch within a 24-hour period).	ITP Condition # 8.3	Entire Project	Permittee	
58	No Project Phase without Erosion Control. No Project phase may be started if that phase and its associated erosion control measures cannot be completed prior to the onset of a storm event if that construction phase may cause the introduction of sediments into a drainage, stream, or pond. Permittee shall consult 72-hour weather forecasts from the National Weather Service prior to startup of any phase of the Project that may result in sediment runoff to the stream.	ITP Condition # 8.6	Entire Project	Permittee	
59	Geotextile and Monofilament Netting Restriction. To minimize the risk of ensnaring and strangling wildlife, Permittee shall not use erosion control materials containing synthetic (e.g., plastic or nylon) monofilament netting. Any geotextile material or filter fabric used within the Project Area shall not any contain petroleum-based products. Geotextiles, fiber rolls, and other erosion control measures shall be made of loose-weave mesh, such as jute, coconut (coir) fiber, or other products without welded or tight weaves.	ITP Condition # 8.7	Entire Project	Permittee	
60	Location of Spoil Sites. Spoil sites shall be placed away from concentrated ground squirrel, gopher, or other small mammal burrows and habitat features suitable for use by the Covered Species as refugia habitat. Spoil sites shall not be located where it may be washed back into a watercourse or within any potential Covered Species habitat throughout the Project Area.	ITP Condition # 8.8	Entire Project	Permittee	
61	Speed Limit. A speed limit of 15 miles per hour shall be observed within construction and staging areas, particularly on rainy or humid nights when CTS may be moving between their breeding ponds and upland habitat. Vehicles include, but are not limited to, tractors, excavators, skid-steers, personnel vehicles, pickup trucks, and dump trucks. This measure does not apply to vehicles utilizing public roads posted with speed limit signage.	ITP Condition # 8.9	Entire Project	Permittee	

	Mitigation Measure	Source	Implementation Schedule	Responsible Party	Status / Date / Initials
62	Cease Operations Authority. The Designated Biologist or Biological Monitor shall have independent authority to stop any and all work if the Covered Species enters the active work area, if Project activities pose imminent threat to the Covered Species, or if Project activities are out of compliance with the measures outlined in this ITP. If the Covered Species is observed within the active Project Area, then all work shall halt and not continue until the Covered Species leaves the area on its own accord. The appropriate distance shall be determined by the Designated Biologist and/or Biological Monitor at the time of discovery. If the Covered Species does not move out of the active work area of its own accord, then it may be relocated per Condition of Approval 8.16 (Covered Species Relocation Plan). If the Qualified Biologist or Biological Monitor witnesses a violation of this ITP, they shall contact CDFW immediately. Permittee shall not enter into non-disclosure agreements with biological staff or otherwise implement penalties or disincentives restricting direct communication with CDFW. Failure to consult immediately with CDFW on violations shall constitute grounds for CDFW to revoke the Biologist's monitoring authority and require Permittee to stop work until another Biologist has been approved.	ITP Condition # 8.10	Entire Project	Permittee	
63	Open Trenches, Pits or Holes. Any open trenches, pits, holes or other excavations into which Covered Species may fall or become trapped shall either be covered, if feasible, or have wildlife escape ramps installed as determined by the Designated Biologist at the end of each workday. Prior to the initiation of Covered Activities each day and prior to the covering of trenches, holes or pits, the Designated Biologist or Biological Monitor shall inspect them for wildlife for movement out of harm's way.	ITP Condition # 8.11	Entire Project	Permittee	
64	Open Pipes Restriction. All pipes, culverts, or similar structures with a 4-inch or greater diameter that are stored on-site for one (1) or more overnight periods shall be securely capped on both ends prior to storage when feasible and thoroughly inspected for wildlife by the Designated Biologist or Construction Monitor prior to utilization. All hollow pipes or posts after they are installed as part of the Project and exposed to the environment shall be capped, screened, or filled with material by Permittee prior to the end of the day on which installation occurs.	ITP Condition # 8.12	Entire Project	Permittee	
65	Covered Species Avoidance. If a Covered Species is observed within the exclusion fencing or directly outside the fencing area at any point of the Project, all work within the immediate area (250 feet) shall immediately halt and all equipment shall be powered off and work shall not continue until a positive identification of the species is made by the Designated Biologist or a Biological Monitor with relevant training and professional experience with the Covered Species. If the Covered Species is discovered, CDFW shall be notified within one (1) to two (2) hours. The Covered Species may be relocated per Condition of Approval 8.17 (Covered Species Relocation Plan).	ITP Condition # 8.14	Entire Project	Permittee	
66	Handling of California Tiger Salamanders. The Covered Species shall be handled and assessed according to The Declining Amphibian Task Force Fieldwork Code of Practice available online at: https://www.fws.gov/media/declining-amphibian-task-force-fieldwork-code-practice.	ITP Condition # 8.16	Entire Project	Permittee	

	Mitigation Measure	Source	Implementation Schedule	Responsible Party	Status / Date / Initials
67	Covered Species Relocation Plan. Permittee shall develop a Relocation Plan for CTS and submit it to CDFW for review and written approval prior to ground-disturbing activities occurring within 1.3 miles of known CTS breeding pools or in suitable upland habitat. At minimum, the Covered Species Relocation Plan shall meet the following requirements: Detailed descriptions of capture, handling, and relocation methods; Quantification of the amount, relative location, and quality of suitable habitat (e.g., breeding, upland, and dispersal habitat) in areas proposed for relocations, including information on invasive and non-native species present, available upland burrows, and potential barriers to movement; Identification of locations to which individuals will be relocated, preferably no more than 300 feet outside of the Project Area unless otherwise approved by CDFW in writing, and approval of locations by CDFW prior to the start of Covered Activities; Documentation of proposed relocation sites by photographs and GPS positions; Measurement (Snout-Vent) and photography of Covered Species for identification purposes prior to relocation; Monitoring of the Covered Species until it is determined by the Designated Biologist that it is not imperiled by predators or other dangers; Relocations shall not be proposed to where non-native tiger salamanders or hybrids are known to exist within the maximum California tiger salamander dispersal distance (i.e., ≤ 1.3 miles); and Documentation of Covered Species relocations shall be provided to the CDFW Representative within 24 hours of Covered Species Relocation.	ITP Condition # 8.17, 8.17.1-8	Entire Project	Permittee	
68	Covered Species Injury. If a Covered Species is injured as a result of Project-related activities, the Designated Biologist shall immediately take it to a CDFW approved wildlife rehabilitation or veterinary facility. Permittee shall identify the facility before starting Covered Activities. Permittee shall bear any costs associated with the care or treatment of such injured Covered Species. The Permittee shall notify CDFW of the injury to the Covered Species immediately by telephone and e-mail followed by a written incident report as described in Condition of Approval 7.9 (Notification of Take or Injury). Notification shall include the name of the facility where the animal was taken.	ITP Condition # 8.18	Entire Project	Permittee	
69	Augering and Excavation Surveys. The Designated Biologist shall survey all augering and excavation soils material originating from up to 6-feet below grade in potential Covered Species habitat. The Permittee shall ensure auger bits are cleaned by shaking the soil loose and not cleaned by spinning. The Permittee shall ensure excavation is coordinated with the Designated Biologist to allow sufficient time to survey the excavated soil.	ITP Condition # 8.19	Entire Project	Permittee	

	Mitigation Measure	Source	Implementation Schedule	Responsible Party	Status / Date / Initials
70	Use of Rodenticide and Poison. At no time during the life of the Project shall rodenticides or other poisons used in the control of burrowing animals be used by Permittee on the Project Area or mitigation site.	ITP Condition # 8.20	Entire Project	Permittee	
	POST CONSTRUCTION				
71	Refuse Removal. Upon completion of Covered Activities, Permittee shall remove from the Project Area and properly dispose of all temporary fill and construction refuse, including, but not limited to, broken equipment parts, wrapping material, cords, cables, wire, rope, strapping, twine, buckets, metal or plastic containers, and boxes.	ITP Condition # 6.16	Post-construction	Permittee	
72	Restoration After Temporary Impacts. All soils exposed or disturbed as a result of Covered Activities shall be revegetated with native plants or seeded with an erosion control seed mix containing native forbs, shrubs, wildflowers, and grasses. Revegetation shall be completed as soon as possible after earthmoving activities cease each construction season; however, plantings shall be most successful if done during the rainy season. Seeding placed after October 15 shall be applied by hydroseed or shall be covered with broadcast straw, jute netting, coconut fiber blanket, light mulch, or a similar erosion control method. Any soils imported to the site for fill shall have similar chemical properties, drainage characteristics and composition to native soils. All imported soils must be free of weeds, weed seeds, and pathogens. Vegetation cover shall consist of less than 5% cover of invasive plant species rated as “high” by the Cal-IPC at the end of one (1) year. Absolute ground cover of naturalized and non-native annual grassland plant species shall be a minimum of 80% at the end of one (1) year. If the survival and/or cover requirements are not meeting these goals, Permittee is responsible for replacement planting, additional watering, weeding, invasive exotic eradication, or any other practice to achieve these requirements over subsequent years until the success criteria is reached. Replacement plants shall be monitored with the same survival and growth requirements as during the initial monitoring period.	ITP Condition # 9.2, 9.2.1-3	Post-Construction	Permittee	

	Mitigation Measure	Source	Implementation Schedule	Responsible Party	Status / Date / Initials
73	Final Mitigation Report. No later than 45 days after completion of all mitigation measures, Permittee shall provide CDFW with a Final Mitigation Report. The Designated Biologist shall prepare the Final Mitigation Report which shall include, at a minimum: (1) a summary of all Monthly Compliance Reports and all ASRs; (2) a copy of the table in the MMRP with notes showing when each of the mitigation measures was implemented; (3) all available information about Project-related incidental take of the Covered Species; (4) information about other Project impacts on the Covered Species; (5) beginning and ending dates of Covered Activities; (6) an assessment of the effectiveness of this ITP's Conditions of Approval in minimizing and fully mitigating Project impacts of the taking on Covered Species; (7) recommendations on how mitigation measures might be changed to more effectively minimize take and mitigate the impacts of future projects on the Covered Species; (8) summary of deceased wildlife; (9) photographs of pre- and post-construction results and; (10) as-built designs of the completed work; and (11) any other pertinent information.	ITP Condition # 7.8	Post-construction and after completion of mitigation	Permittee	

DocuSign Envelope ID: A02FC8C4-93F1-485A-825A-27F65F9A227E

Project Name:
LSA Agreement/ITP Number(s):

Department of Fish and Wildlife

BIOLOGIST RESUME COVER SHEET

SUBMIT EACH RESUME AS A SEPARATE DOCUMENT

Number of Resumes Included in Transmittal: _____

Name	Requested Role(s)[1]	Species/Resource(s)

[1] Requested roles correspond to the biological staffing requirements indicated in the Lake and Streambed Alteration (LSA) Agreement or California Endangered Species Act Incidental Take Permit (ITP). Roles may include a "Qualified Biologist" or "Designated Biologist" with the necessary experience to survey for special status species, or a "Biological Monitor" with the necessary experience to monitor construction activities for special status species. An individual may request more than one role.

DocuSign Envelope ID: A02FC8C4-93F1-485A-825A-27F65F9A227E

Project Name:
LSA Agreement/ITP Number(s):

Department of Fish and Wildlife

BIOLOGIST RESUME FORM

This form requests information about the qualifications of the Qualified Biologist, Designated Biologist and Biological Monitor specified in California Endangered Species Act Incidental Take Permits (ITP) and Lake or Streambed Alteration (LSA) Agreements issued by California Department of Fish and Wildlife (CDFW).

Completing this form will ensure the receipt of adequate information and expedite CDFW review of qualifications.

SECTION I. NAME AND CONTACT INFORMATION

Name:		Title:	
Company Name & Address:		Phone:	
		Email:	

SECTION II. EDUCATION

College/University & Degree Type Related to Natural Resource Science:	
Other Relevant Workshops & Training:	

SECTION III. ROLE(S) AND PERMIT REQUIREMENTS

Requested Role(s):	
Relevant LSA Agreement Measures or ITP Conditions[2]:	

SECTION IV. SPECIES AND RESOURCE EXPERIENCE – SUMMARY

This section summarizes experience by special status species and other resource. Use one row for each species or other resource where surveys or special protections are required in the CESA ITP or LSA Agreement for which biologist approval is requested.[3] If more space is needed, add rows to this table. Provide details in Section 5.

Species or Resource	Number of Field Seasons & Hours, Life Stages Observed *Provide project details in Section 5*	Life History Knowledge *Describe formal workshops & training with dates, or informal training details*	CDFW SCP, MOU, & USFWS 10a1a Authorization Number & Authorized Activities *This form does not fulfill SCP, MOU, & USFWS 10a1a reporting requirements*	
Insert Species or Resource 1	Field seasons: Hours: Life Stages:			Issued to: Expiration: Agency contact:
Insert Species or Resource 2	Field seasons: Hours: Life Stages:			Issued to: Expiration: Agency contact:
Insert Species or Resource 3	Field seasons: Hours: Life Stages:			Issued to: Expiration: Agency contact:

[2] List all measures and conditions from the LSA Agreement or ITP requiring biological staff (i.e., Qualified Biologist, Designated Biologist, or Biological Monitor).

[3] Often LSA Agreements/ITPs require surveys and other protections for multiple species and other resources. Include only those for which the biologist has experience and is requesting approval.

Project Name:
LSA Agreement/ITP Number(s):

SECTION V. SPECIES AND RESOURCE EXPERIENCE – DETAILS

This section details experience from the three most recent and relevant projects for each species and resource identified in Section 4. If more space is needed, attach additional pages in the same table format (i.e., copy/paste format).

A. Species or Resource:			
Project 1 Name & Location:		Project Start & End Dates:	
LSA Agreement, ITP, or Other Agency Permit Number:		Role(s)[4]:	
Survey Type(s)[5]:		Construction Monitoring[6]:	Days: Activities:
Species Life Stages Observed & Handled, Number of Each:	Life Stage: Number Observed: Number Handled: Reported to CNDDB[7] (Y/N):	Company Name, Professional Reference Name, Phone, Email:	
If not reported to CNDDB, why:			
CDFW and Other Agency Email:			
Project 2 Name & Location:		Project Start & End Dates:	
LSA Agreement, ITP, or Other Agency Permit Number:		Role(s):	
Survey Type(s):		Construction Monitoring:	Days: Activities:
Species Life Stages Observed & Handled, Number of Each:	Life Stage: Number Observed: Number Handled: Reported to CNDDB (Y/N):	Company Name, Professional Reference Name, Phone, Email:	
If not reported to CNDDB, why:			
CDFW and Other Agency Email:			
Project 3 Name & Location:		Project Start & End Dates:	
LSA Agreement, ITP, or Other Agency Permit Number:		Role(s):	
Survey Type(s):		Construction Monitoring:	Days: Activities:

[4] Insert the role as described in the associated LSA Agreement, ITP or other agency permit. If these permits were not issued, describe the role based on the duties, e.g., "lead biologist with handling authorization" or "biological monitor."
[5] For example, pre-construction survey or description of the protocol or guideline followed.
[6] Include the number of days and describe the types of activities monitored (e.g., heavy equipment operation).
[7] CNDDB is the abbreviation for California Natural Diversity Database.

Project Name:
LSA Agreement/ITP Number(s):

Species Life Stages Observed & Handled, Number of Each:	Life Stage: Number Observed: Number Handled: Reported to CNDDB (Y/N):	Company Name, Professional Reference Name, Phone, Email:	
If not reported to CNDDB, why:			
CDFW and Other Agency Email:			
Additional Information:			

B. Species or Resource:			
Project 1 Name & Location:		Project Start & End Dates:	
LSA Agreement, ITP, or Other Agency Permit Number:		Role(s):	
Survey Type(s):		Construction Monitoring:	Days: Activities:
Species Life Stages Observed & Handled, Number of Each:	Life Stage: Number Observed: Number Handled: Reported to CNDDB (Y/N):	Company Name, Professional Reference Name, Phone, Email:	
If not reported to CNDDB, why:			
CDFW and Other Agency Email:			
Project 2 Name & Location:		Project Start & End Dates:	
LSA Agreement, ITP, or Other Agency Permit Number:		Role(s):	
Survey Type(s):		Construction Monitoring:	Days: Activities:
Species Life Stages Observed & Handled, Number of Each:	Life Stage: Number Observed: Number Handled: Reported to CNDDB (Y/N):	Company Name, Professional Reference Name, Phone, Email:	
If not reported to CNDDB, why:			
CDFW and Other Agency Email:			
Project 3 Name & Location:		Project Start & End Dates:	
LSA Agreement, ITP, or Other Agency Permit Number:		Role(s):	
Survey Type(s):		Construction Monitoring:	Days: Activities:

Project Name:
LSA Agreement/ITP Number(s):

Species Life Stages Observed & Handled, Number of Each:	Life Stage: Number Observed: Number Handled: Reported to CNDDB (Y/N):	Company Name, Professional Reference Name, Phone, Email:	
If not reported to CNDDB, why:			
CDFW and Other Agency Email:			
Additional Information:			

C. Species or Resource:			
Project 1 Name & Location:		Project Start & End Dates:	
LSA Agreement, ITP, or Other Agency Permit Number:		Role(s):	
Survey Type(s):		Construction Monitoring:	Days: Activities:
Species Life Stages Observed & Handled, Number of Each:	Life Stage: Number Observed: Number Handled: Reported to CNDDB (Y/N):	Company Name, Professional Reference Name, Phone, Email:	
If not reported to CNDDB, why:			
CDFW and Other Agency Email:			
Project 2 Name & Location:		Project Start & End Dates:	
LSA Agreement, ITP, or Other Agency Permit Number:		Role(s):	
Survey Type(s):		Construction Monitoring:	Days: Activities:
Species Life Stages Observed & Handled, Number of Each:	Life Stage: Number Observed: Number Handled: Reported to CNDDB (Y/N):	Company Name, Professional Reference Name, Phone, Email:	
If not reported to CNDDB, why:			
CDFW and Other Agency Email:			
Project 3 Name & Location:		Project Start & End Dates:	
LSA Agreement, ITP, or Other Agency Permit Number:		Role(s):	
Survey Type(s):		Construction Monitoring:	Days: Activities:

Project Name:
LSA Agreement/ITP Number(s):

Species Life Stages Observed & Handled, Number of Each:	Life Stage: Number Observed: Number Handled: Reported to CNDDB (Y/N):	Company Name, Professional Reference Name, Phone, Email:	
If not reported to CNDDB, why:			
CDFW and Other Agency Email:			
Additional Information:			

DocuSign Envelope ID: A02FC8C4-93F1-485A-825A-27F65F9A227E

[***Financial institution letterhead***]

IRREVOCABLE STANDBY LETTER OF CREDIT
NO. [***number issued by financial institution***]

Issue Date: [***date***]

Beneficiary:

California Department of Fish and Wildlife
Habitat Conservation Planning Branch
Post Office Box 944209
Sacramento, CA 94244-2090
Attn: HCPB Contract Coordinator

Amount: U.S. $[***dollar number***] [(***dollar amount***)]

Expiry: [***Date***] at our counters

Dear Sirs:

1. At the request and on the instruction of our customer, [***name of applicant***] ("Applicant"), we, [***name of financial institution***] ("Issuer"), hereby establish in favor of the beneficiary, the California Department of Fish and Wildlife ("CDFW"), this irrevocable standby letter of credit ("Credit") in the principal sum of U.S. $[***dollar number***] [(***dollar amount***)] ("Principal Sum").

2. We are informed this Credit is and has been established for the benefit of CDFW pursuant to the terms of the incidental take permit for the [***name of project***] issued by CDFW to the Applicant on [***date***] (No. [***number***]) ("Permit").

3. We are further informed that pursuant to the Permit, the Applicant has agreed to complete certain mitigation requirements in the Permit ("Mitigation Requirements").

4. We are finally informed that this Credit is intended by CDFW and the Applicant to serve as a security device for the performance by the Applicant of the Mitigation Requirements.

5. CDFW shall be entitled to draw upon this Credit only by presentation of a duly executed Certificate for Drawing ("Certificate") in the same form as Attachment A, which is attached hereto, at our office located at [***name and address of financial institution***].

DocuSign Envelope ID: A02FC8C4-93F1-485A-825A-27F65F9A227E

6. The Certificate shall be completed and signed by an Authorized Representative of CDFW as defined in paragraph 12 below. Presentation by CDFW of a completed Certificate may be made in person or by registered mail, return receipt requested, or by overnight courier.

7. Upon presentation of a duly executed Certificate as above provided, payment shall be made to CDFW, or to the account of CDFW, in immediately available funds, as CDFW shall specify.

8. If a demand for payment does not conform to the terms and conditions of this Credit, we shall give CDFW prompt notice that the demand for payment was not effected in accordance with the terms and conditions of this Credit, state the reasons therefore, and await further instruction.

9. Upon being notified that the demand for payment was not effected in conformity with the Credit, CDFW may correct any such non-conforming demand for payment under the terms and conditions stated herein.

10. All drawings under this Credit shall be paid with our funds. Each drawing honored by us hereunder shall reduce, *pro tanto*, the Principal Sum. By paying to CDFW an amount demanded in accordance herewith, we make no representations as to the correctness of the amount demanded.

11. This Credit will be cancelled upon receipt by us of Certificate of Cancellation, which: (i) shall be in the form of Attachment B, which is attached hereto, and (ii) shall be completed and signed by an Authorized Representative of CDFW, as defined in paragraph 12 below.

12. An Authorized Representative shall mean the Director of CDFW; the General Counsel of CDFW; a Regional Manager of CDFW; or the Branch Chief of CDFW's Habitat Conservation Planning Branch.

13. This Credit shall be automatically extended without amendment for additional periods of one year from the present or any future expiration date hereof, unless at least sixty (60) days prior to any such date, we notify CDFW in writing by registered mail, return receipt requested, or by overnight courier that we elect not to consider this Credit extended for any such period.

14. Communications with respect to this Credit shall be in writing and addressed to us at [***name and address of financial institution***], specifically referring upon such writing to this credit by number. The address for notices with respect to this Credit shall be: (i) for CDFW: Department of Fish and Wildlife, Habitat Conservation Planning Branch, Post Office Box 944209, Sacramento, CA 94244-2090, Attn: HCPB Contract Coordinator; and (ii) for the Applicant: [***name and address of applicant***].

DocuSign Envelope ID: A02FC8C4-93F1-485A-825A-27F65F9A227E

15. This Credit may not be transferred.

16. This Credit is subject to the International Standby Practices 1998 (“ISP 98”). As to matters not covered by the ISP 98 and to the extent not inconsistent with the ISP 98, this credit shall be governed by and construed in accordance with the Uniform Commercial Code, Article 5 of the State of California.

17. This Credit shall, if not canceled, expire on [***expiration date***], or any extended expiration date.

18. We hereby agree with CDFW that documents presented in compliance with the terms of this Credit will be duly honored upon presentation, as specified herein.

19. This Credit sets forth in full the terms of our undertaking. Such undertaking shall not in any way be modified, amended or amplified by reference to any document or instrument referred to herein or in which this Credit is referred to or to which this Credit relates and any such reference shall not be deemed to incorporate herein by reference any document or instrument.

[***Name of financial institution***]

By: _____
Name: _____
Title: _____
Telephone: _____

DocuSign Envelope ID: A02FC8C4-93F1-485A-825A-27F65F9A227E

ATTACHMENT A

CERTIFICATE FOR DRAWING

[***CDFW Letterhead***]

[***Date***]

[***Name and address of financial institution***]

Re: Irrevocable Standby Letter of Credit No. [***number issued by financial institution***]

The undersigned, a duly Authorized Representative of the California Department of Fish and Wildlife ("CDFW"), as defined in paragraph 12 in the above-referenced standby letter of credit ("Credit"), hereby certifies to the Issuer that:

1. [***Insert one of the following statements:*** "In the opinion of CDFW, the Applicant has failed to complete the Mitigation Requirements referenced in paragraph 3 of the Credit." ***or*** "As set forth in paragraph 13, the Issuer has informed CDFW that the Credit will not be extended and the Applicant has not provided CDFW with an equivalent security approved by CDFW to replace the Credit."]

2. The undersigned is authorized under the terms of the Credit to present this Certificate as the sole means of demanding payment on the Credit.

3. CDFW is therefore making a drawing under the Credit in amount of U.S. $_____.

4. The amount demanded does not exceed the Principal Sum of the Credit.

Therefore, CDFW has executed and delivered this Certificate as of this ___day of [***month***], [***year***].

CALIFORNIA DEPARTMENT OF FISH AND WILDLIFE

_____

[***Insert one of the following:*** "Director" ***or*** "General Counsel" ***or*** "Regional Manager, [***Name of Regional Office***]" ***or*** "Chief, Habitat Conservation Planning Branch"]

DocuSign Envelope ID: A02FC8C4-93F1-485A-825A-27F65F9A227E

ATTACHMENT B

CERTIFICATE FOR CANCELLATION

[***CDFW Letterhead***]

[***Date***]

[***Name and address of financial institution***]

Re: Irrevocable Standby Letter of Credit No. [***number issued by financial institution***]

The undersigned, a duly Authorized Representative of the California Department of Fish and Wildlife ("CDFW"), as defined in the paragraph 12 in the above-referenced Irrevocable Standby Letter of Credit ("Credit"), hereby certifies to the Issuer that:

1. [***Insert one of the following statements:*** "The Applicant has presented documentary evidence of full compliance with the Mitigation Requirements referenced in paragraph 3 of the Credit." ***or*** "The Applicant has provided CDFW with an equivalent security approved by CDFW to replace the Credit."]

2. CDFW therefore requests the cancellation of the Credit.

Therefore, CDFW has executed and delivered this Certificate for Cancellation as of this ____ day of [***month***], [***year***].

CALIFORNIA DEPARTMENT OF FISH AND WILDLIFE

_____

[***Insert one of the following:*** "Director" ***or*** "General Counsel" ***or*** "Regional Manager, [***Name of Regional Office***]" ***or*** "Chief, Habitat Conservation Planning Branch"]

DocuSign Envelope ID: A02FC8C4-93F1-485A-825A-27F65F9A227E

State of California - Department of Fish and Wildlife

MITIGATION PAYMENT TRANSMITTAL FORM

DFW 1057 (REV.05/18/21)

Project Applicant Instructions: Please fill out and attach this form to payment. For conservation banks, also attach the Bill(s) of Sale for credits sold. One form may be used for multiple transactions, **BUT YOU MUST USE A SEPARATE FORM FOR EACH CHECK YOU TRANSMIT**. Make sure to include Project Name, Project Tracking Number, and ASB Mitigation Tracking Number (if available) on the attached payment type.

1. DATE: _____

TO: _____
Regional Manager

_____
Region Office Address

2. FROM: _____
Name

_____
Mailing Address

_____
City, State, Zip

_____
Telephone Number/FAX Number

3. RE: _____
Project Name as appears on permit/agreement

4. AGREEMENT/ACCOUNT INFORMATION: (check the applicable type)

☐ 2081 Permit ☐ Conservation Bank ☐ 2835 NCCP ☐ 1802 Agreement ☐ 1600 Agreement ☐ Other _____

_____
Project Tracking Number

5. PAYMENT TYPE (One check per form only): The following funds are being remitted in connection with the above referenced project:

Check information:

Total $_____ Check No. _____

Account No. _____ Bank Routing No. _____

a. Endowment: for Long-Term Management Subtotal $_____

b. Habitat Enhancement Subtotal $_____

c. Security:

1. Cash Refundable Security Deposit Subtotal $_____
2. Letter of Credit Subtotal $_____
   1. Financial Institution: _____
   2. Letter of Credit Number: _____
3. Date of Expiration: _____

ACCOUNTING OFFICE USE ONLY	
Description	**FI$Cal Coding**
Speedchart (Project, Program, Reference, Fund)	
Reporting Structure	
Category	
Date Established: _____ By: _____	

Please send this form to asbmitigation@wildlife.ca.gov