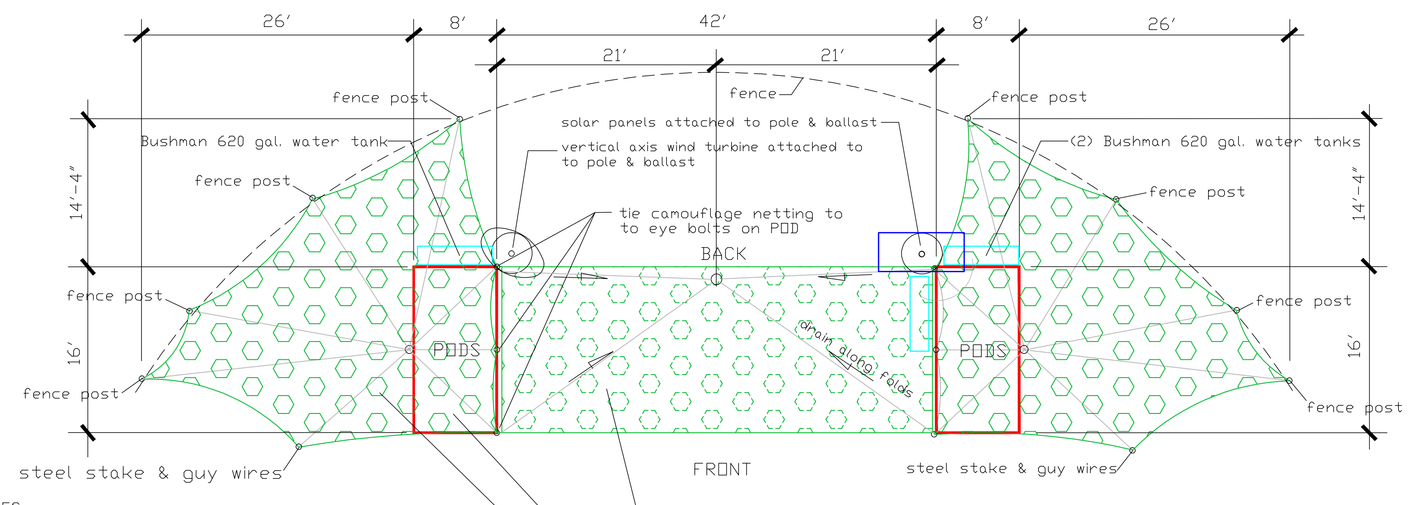

NOTES:
PODS store nursery supplies, tools, cpu, batteries power converters, seed bank, netting, fencing, etc.

POD (Portable On Demand Storage) are waterproof steel frame with alluminum coated plywood siding. PODS sits on 4"x4" pressurized wood skids at 2' o.c., set on 4" deep compacted graded gravel. Doors are roll-up and lockable.

16' wide by 42' long waterproof canvas camouflage shade structure canvas captures rain water to fill adjacent water tanks

8'wide x8' ht. x 16' long Portable On Demand Storage (PODS)

camouflage netting with steel stakes and tied to fencing.

not for construction

(A) PLAN VIEW OF "TERRA-PODS" SHADE STRUCTURE
1/8" = 1'-0"

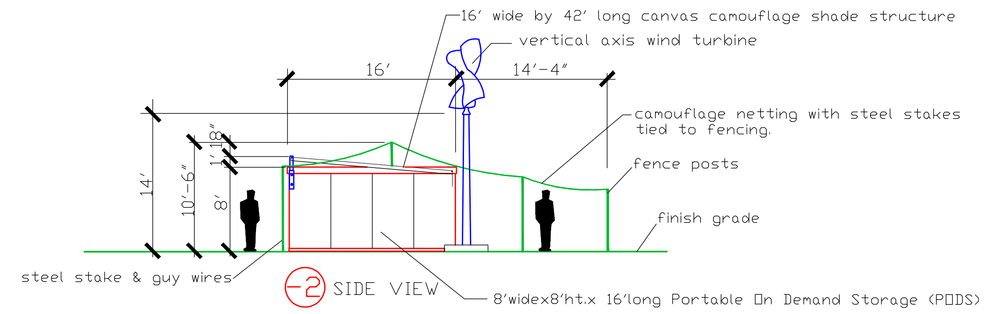

(-2) SIDE VIEW

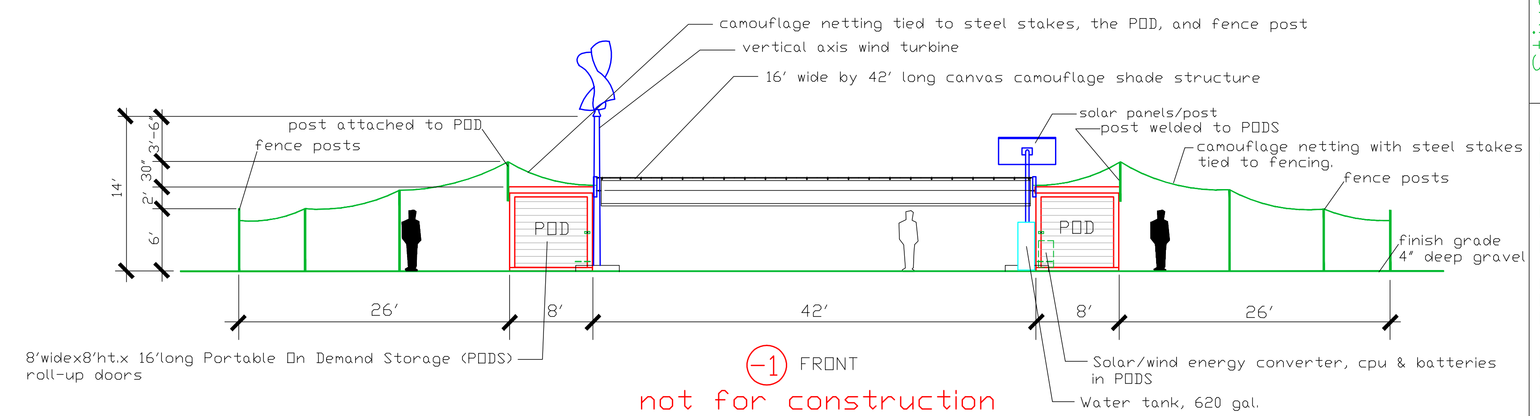

(-1) FRONT

not for construction

ELEVATIONS "TERRA-PODS" STORAGE
1/8" = 1'-0"

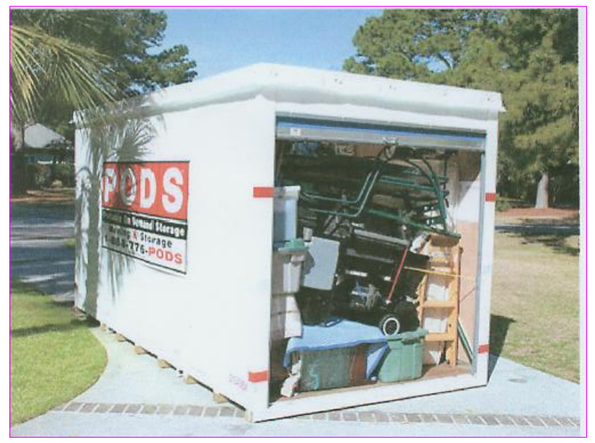

(B) PORTABLE ON DEMAND STORAGE

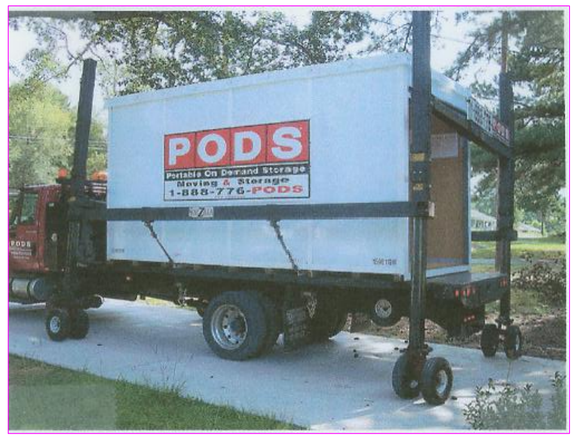

(-1) PODZILLA LIFT & TRANSPORT SYSTEM

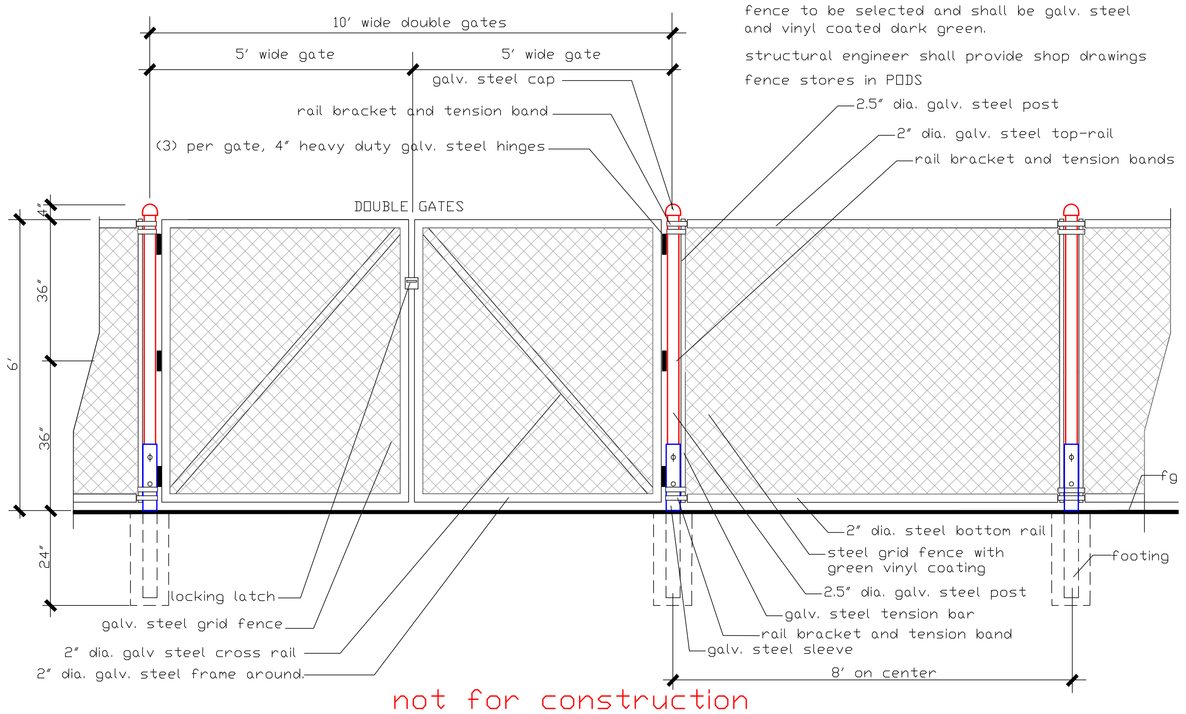

Notes:
fence to be selected and shall be galv. steel and vinyl coated dark green.

structural engineer shall provide shop drawings

fence stores in PODS

not for construction

(C) TEMPORARY FENCING & DOUBLE GATES
NOT TO SCALE

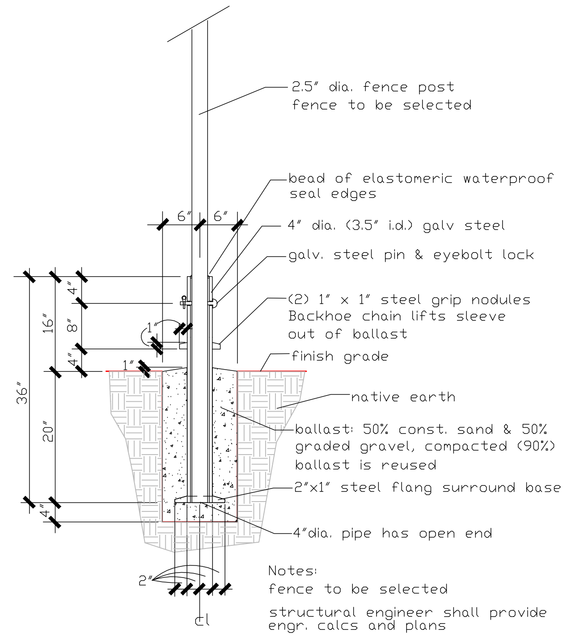

Notes:
fence to be selected

structural engineer shall provide engr. calcs and plans

not for construction

(-1) TEMPORARY FENCE POST SLEEVE
NOT TO SCALE

(D) SOLAR PANELS & POWER CONVERTER

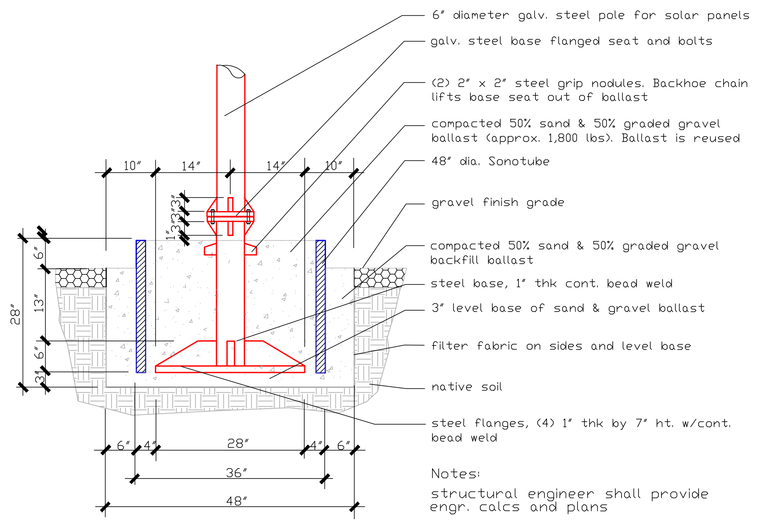

Notes:
structural engineer shall provide engr. calcs and plans

not for construction

(-1) SOLAR PANEL POLE MOUNT & BALLAST
NOT TO SCALE

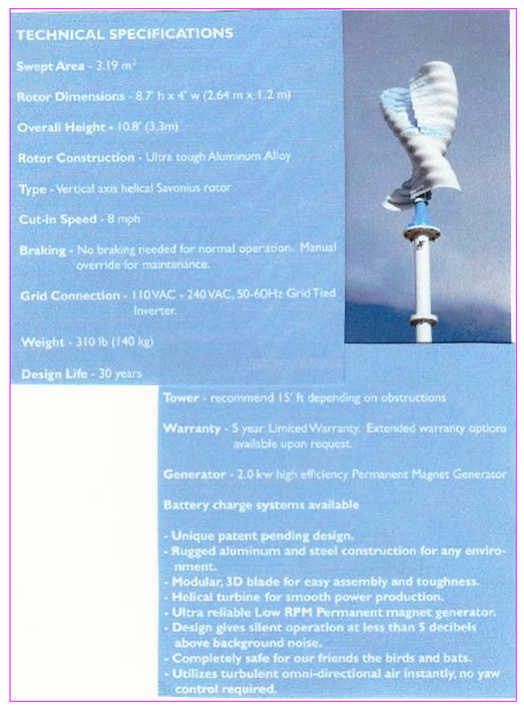

(E) VERTICAL AXIS WIND TURBINE

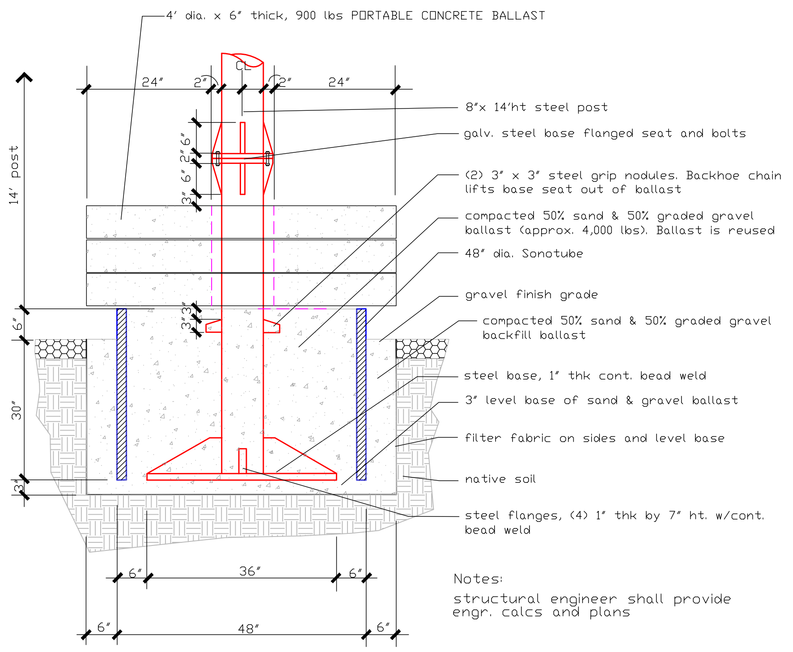

Notes:
structural engineer shall provide engr. calcs and plans

not for construction

(-1) WIND TURBINE POLE MOUNT & BALLAST
NOT TO SCALE

Stivers & Associates
Environmental Planners
Landscape Architects
Urban Forestry
160 Centennial Way
Suite 3
Tustin, CA 92780
(714) 838-2811
FAX (714) 838-0727
CA lic. #2708

COMMUNITY PROMOTED RESTORATION, CPR FOR THE MESA
CALIFORNIA DEPARTMENT OF FISH and GAME
SOUTH COAST REGION PROJECT PLAN EVALUATION
BOLSA CHICA LAND TRUST
HUNTINGTON BEACH, CALIFORNIA

CONSTRUCTION DETAILS
(not for construction)

REVISIONS	BY

DRAWN	G.S.
CHECKED	G.S.
DATE	4/27/2010
SCALE	NOTED
JOB #	

REGISTERED LANDSCAPE ARCHITECT
CONSTANCE STIVERS LA 2708
Signature
Renew Date
Date
STATE OF CALIFORNIA

L7

C:\Users\Bolsa Chica Mesa CPR\Hospot Analysis Designs\survey\Constl.dwg, 2/8/2011 1:17:24 PM