Late Holocene Lacustrine Chronology and Archaeology of Ancient Lake Cahuilla, California

MICHAEL R. WATERS

Department of Geosciences, University of Arizona, Tucson, Arizona 85721

Received March 31, 1981

Freshwater lakes existed intermittently in the Salton Trough of southern California during the late Holocene. The lakes formed north of the subaerial Colorado River Delta whenever the Colorado River flowed west into the trough instead of south to the Gulf of California. Water filled the trough to a maximum altitude of 12 m. Stratigraphy, radiocarbon dates, and supplementary evidence document four lacustral intervals of Lake Cahuilla between A.D. 700 and 1580. Archaeological sites are associated with the 12-m shoreline and their occupation correlates with these lacustral intervals.

INTRODUCTION

A prominent lacustrine shoreline occurs at an altitude of 12 m in the Salton Trough of southern California (Fig. 1). William Blake first reported this lacustrine shoreline in 1854, and in 1907 he designated the extinct body of water it represents as "Lake Cahuilla." Although important for understanding the late Holocene geology and archaeology of the Colorado Desert, the lacustrine chronology of Lake Cahuilla has never been rigorously investigated. This paper presents the late Holocene chronology of Lake Cahuilla and relates this chronology to the regional archaeology.

PHYSIOGRAPHIC SETTING

The Salton Trough is the landward extension of the depression flooded by the Gulf of California (Fig. 2). The trough extends 225 km northwestward from the head of the Gulf of California, and ranges in width from a few kilometers at its northwest end to 110 km at the United States–Mexico border. More than 5400 km² of the trough lie below sea level. The Salton Trough is surrounded by mountains on all sides except the south where the barrier formed by the subaerial Colorado River Delta separates the Salton Trough from the Gulf of California.

The depositional basin contains fine-grained Colorado River sediments peripherally surrounded by locally derived coarse-grained alluvium and colluvium (Merriam and Bandy, 1965). Major faults, including the San Andreas, traverse the trough.

The trough lies within the Colorado Desert and has a climate characterized by low annual precipitation (average 6.4 cm/yr), high summer temperatures (up to 51°C), and mild winters (Hely *et al.*, 1966). All streams in the Salton Trough are ephemeral.

The Colorado River, which now flows south to the Gulf of California, has influenced the geologic history of the Salton Trough. It originates in the Rocky Mountains of Colorado, Utah, and Wyoming and drains an area of more than 629,270 km². The average annual discharge of the river gauged at Yuma, Arizona, from 1903–1930 was 2×10^4 hm³/yr (Hely, 1969). After 1930 the discharge decreased due to upstream damming and water withdrawals. Thomas *et al.* (1960) extrapolated the average annual discharge of the Colorado River for the last 650 yr from tree-ring and climatic records. Their discharge estimate agrees closely with the 1903–1930 average.

HYDROLOGY OF LAKE CAHUILLA

Lake Cahuilla formed several times in response to the western diversion of the Col-

0033-5894/83 $3.00

FIG. 1. Late Holocene 12-m shoreline of Lake Cahuilla conspicuously marked by tufa deposits on outcrops that protruded into the ancient lake. Photograph looking east across the Salton Trough from Travertine Point toward the Salton Sea.

orado River into the Salton Trough. Analysis of the lacustrine sediments deposited in the central and southern portions of the lake indicate that they were derived from the Colorado River (Van de Kamp, 1973). Diversion of the Colorado River into the trough is an expected phenomenon considering the general physiography of the delta and the instability of meandering distributary channels across it (Thompson, 1968; Wilke, 1978). Distributary channels probably continually shifted position on the delta. Those near the delta crest occasionally overflowed, cut through their natural levees toward the north, and discharged down the steeper northern slope of the delta into the Salton Trough to form ephemeral lakes. The base-level changes involved would favor rapid headcutting and enlargement of the channel in this alluvial terrain, and the entire flow of the Colorado River probably would eventually be captured. The avulsion of a channel into the trough could have been triggered by infrequent large floods or by tectonic movements.

During each filling of Lake Cahuilla, water was impounded north of the barrier created by the subaerial Colorado River Delta. The lake continued to fill until the water level reached an altitude of 12 m, the minimum crest altitude of the delta at Cerro Prieto. Lake Cahuilla at this altitude had a surface area of over 5700 km^2 and a maximum depth of 95 m (Fig. 3). A hydrologic budget indicates that approximately half the average annual discharge of the Colorado River, under present conditions of evaporation and precipitation, would be necessary to maintain a lake at this altitude (Thompson, 1968; Weide, 1976a; Wilke, 1978). Excess discharge from the Colorado

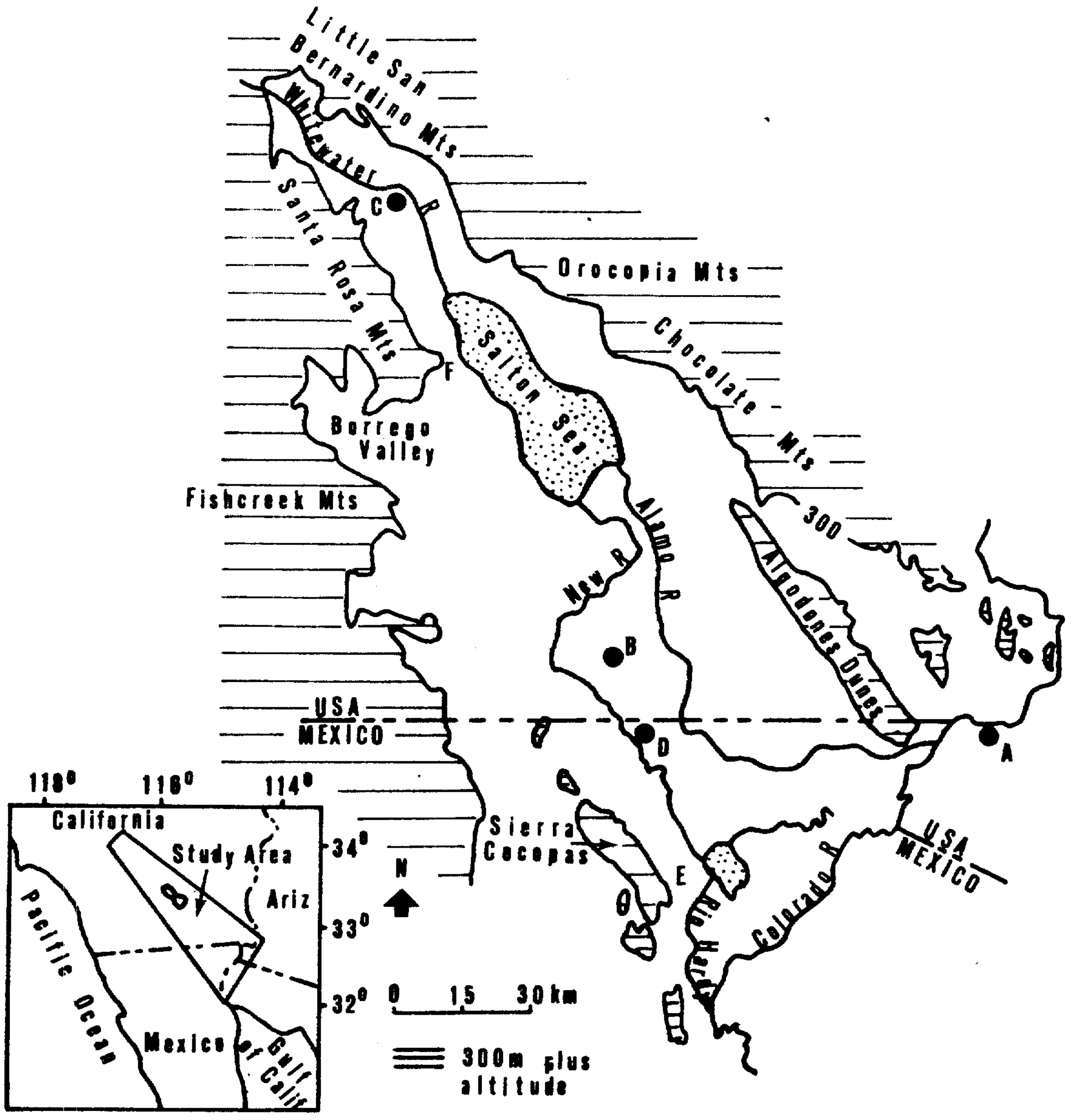

FIG. 2. Map of the modern Salton Trough, California. Delta conditions date to the early 20th century. (A) Yuma, Arizona; (B) El Centro, California; (C) Indio, California; (D) Mexicali, Mexico; (E) Cerro Prieto, Mexico; (F) Travertine Point.

River would enter Lake Cahuilla, overflow the delta, and flow south to the Gulf of California. Wilke (1978) calculated that about 12 to 20 yr would be required to fill Lake Cahuilla to an altitude of 12 m if the lake were to receive the entire flow of the Colorado River. Eventually the Colorado River would redivert its flow back to the Gulf of California causing Lake Cahuilla to evaporate slowly. The rediversion of the Colorado River could have been triggered by tectonic movements, base-level changes, or a large flood. Wilke (1978) calculated that 60 yr would be required to desiccate Lake Cahuilla completely at a rate of 1.8 m/yr when it was isolated from Colorado River discharge.

Because the existence and level of the lake must have been controlled to a large extent by the amount of Colorado River discharge entering the Salton Trough and the minimum crest altitude of the Colorado Delta, this lake provides little paleoclimatic information about southern California during the late Holocene. Its mode of origin is unique and differs from other closed-basin lakes formed as a result of a climatic change.

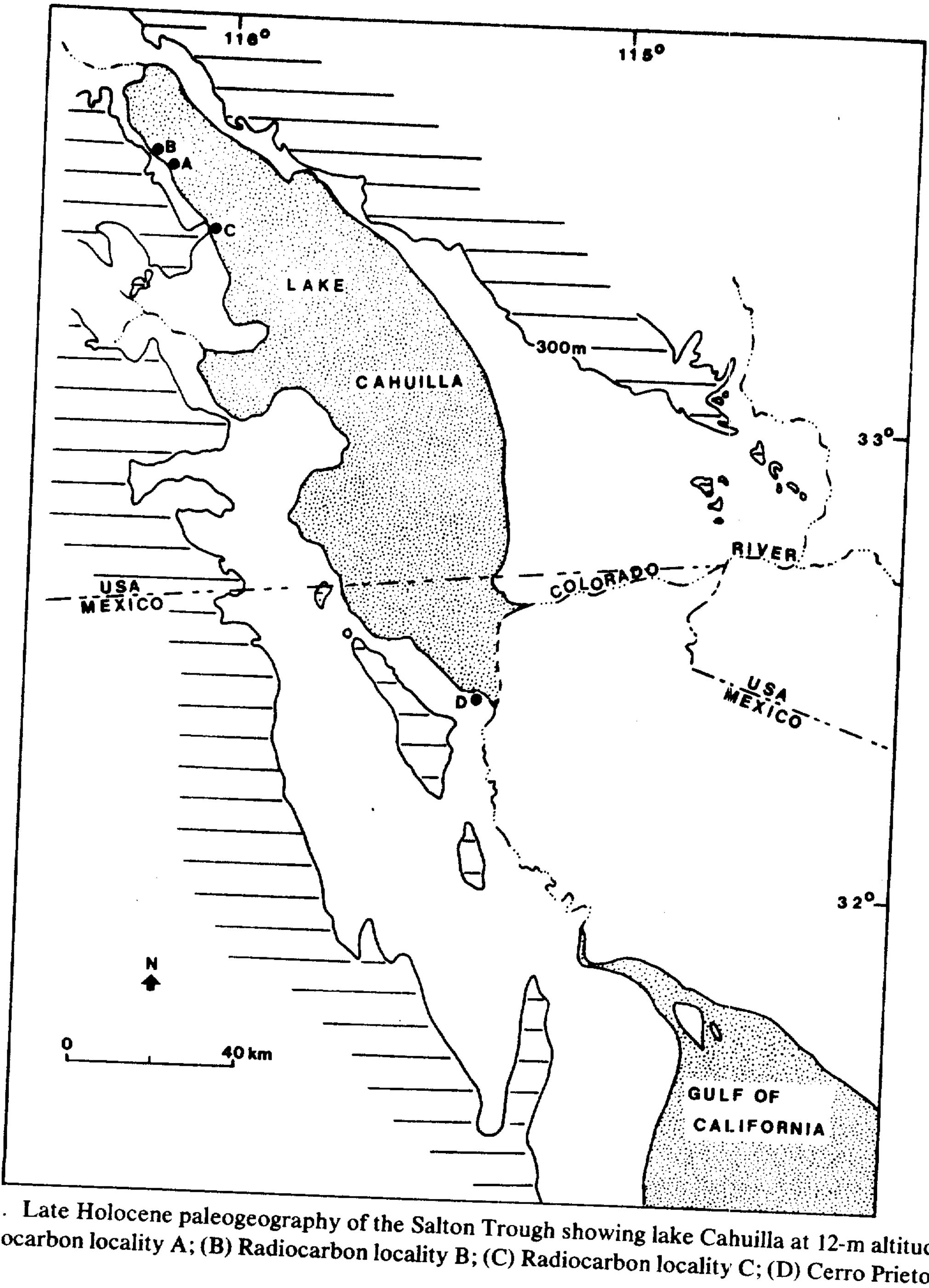

FIG. 3. Late Holocene paleogeography of the Salton Trough showing lake Cahuilla at 12-m altitude. (A) Radiocarbon locality A; (B) Radiocarbon locality B; (C) Radiocarbon locality C; (D) Cerro Prieto.

PREVIOUS CHRONOLOGIES

Stanley (1962, 1965) and Wilke (1978) each describe chronologies for late Holocene Lake Cahuilla. Stanley postulates repeated fillings of the basin to capacity to an altitude of 12 m and suggests that there were at least three lacustral intervals of the lake. Wilke (1978) also describes three lacustral intervals of Lake Cahuilla and places them between 100 B.C. and A.D. 600, A.D. 900 and 1250, and A.D. 1300 and 1500. He suggests that each of these intervals might actually represent a series of stands interrupted by complete or partial desiccation. The dating of these stands is based on the interpretation of radiocarbon dates and historical information.

Wilke (1978) groups radiocarbon dates that are mainly from archaeological sites temporally associated with the lake, but are also from tufa, tule charcoal, and shell, into three clusters which are interpreted as representing three lacustral intervals. However, the radiocarbon dates utilized may be inadequate to make this interpretation. The dated samples were not collected systematically and have no meaningful geologic context; furthermore, the accuracy of many of the dates is suspect because none have been corrected for carbon-isotope fractionation and many of the samples could suffer from methodological errors. Dates from archaeological contexts are difficult to apply to the geologic problem in question. The clustering of radiocarbon dates reported by Wilke may be fortuitous and may represent something other than lacustral intervals. Wilke also utilizes dates for the occurrence of obsidian from Obsidian Buttes (inundated by Lake Cahuilla) at the Peppertree archaeological site (CA-Riv-463 located 150 km northwest of Obsidian Buttes) and a single radiocarbon date of tule charcoal from a stratigraphic context within the Salton Trough as indications of one or more desiccations of Lake Cahuilla after A.D. 900. He uses historic records to date the latest termination of the lake. Although some of the new evidence to be discussed does not support some of Wilke's conclusions, Wilke must be acknowledged for his attempt to synthesize the available data to derive a lacustrine chronology.

EVIDENCE OF LATE HOLOCENE LACUSTRAL INTERVALS

Geomorphic and archaeological evidence indicates a late Holocene age for the 12-m shoreline. The lacustrine topographic features are very well preserved and almost continuous around the perimeter of the trough. Desert varnish and desert pavements are absent on the beaches, and soil development is weak and characterized by the formation of torripsamments (entisols). Archaeological sites temporally associated with the 12-m shoreline contain ceramics not made before the late Holocene (Waters, 1982a).

New radiocarbon dates from stratigraphic contexts are the foundation for the revised chronology. Supplementary evidence is provided by previously reported radiocarbon dates, historical evidence, the late Holocene sedimentological history of the Gulf of California, and interpretation of sedimentation rates. My research shows that there were four lacustral intervals that reached the 12-m shoreline during the last 2000 yr, these are designated, from oldest to youngest, as lacustral intervals 1 through 4. The term lacustral interval is used to designate a lacustrine episode that reached the 12-m shoreline and was interrupted by either complete or nearly complete desiccation.

Stratigraphy

Exposures of the late Holocene stratigraphy of Lake Cahuilla are numerous, but exposures indicating alternation between lacustrine and fluvial deposition are rare and confined mostly to the northwest portion of the Salton Trough. The deepest and most continuous exposures are located about 8 km southwest of Indio, California, where a 6-km-long trench has been excavated to control flooding. The trench runs north–south and occurs at the mouth of a small embayment surrounded by mountains. The stratigraphy at the north and south ends of the trench has been carefully studied and radiocarbon samples were collected from the exposed deposits. Stratigraphic locality A occurs at the south end of the trench and locality B at the north end; the localities are separated by nearly continuous exposure (Figs. 3 and 4). The surface of each locality is at sea level.

The lacustrine and fluvial deposits are interbedded at these locations (Figs. 4 and 5). The former generally ranges from horizontal or ripple-laminated, very-fine sand to silt and contains freshwater shellfish. The fluvial deposits are composed mainly of coarse sand with minor amounts of gravel. The gravel commonly occurs close to the mountain front and is generally confined to distinct channels. Most of the sand represents deposition by sheet wash.

Deposits of lacustral interval 4 (Fig. 4) are continuous between the two sections with only minor breaks, and it was possible

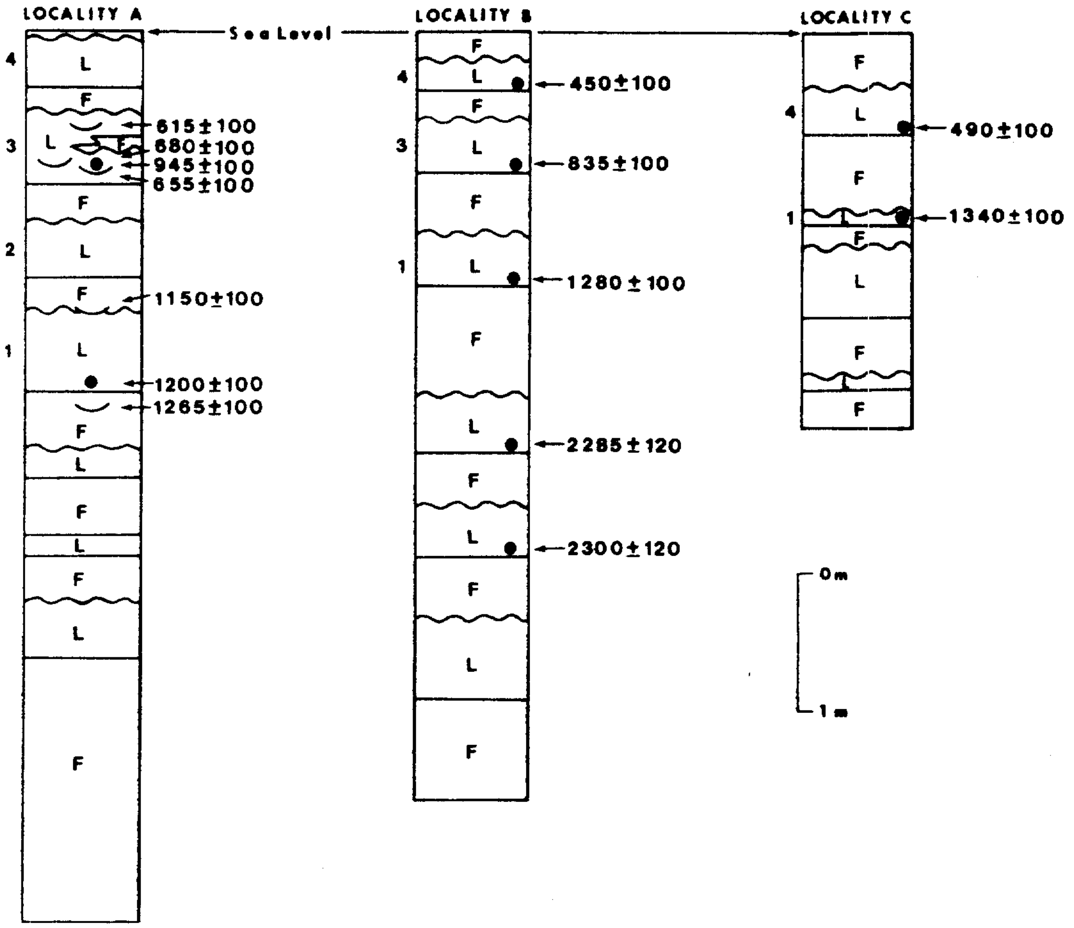

FIG. 4. Stratigraphic sections at radiocarbon localities A, B, and C. Dates give in δ^{13}C-corrected radiocarbon yr B.P. (Table 1). Explanation: (F) fluvial deposits; (L) lacustrine deposits; (1) deposits of lacustral interval 1; (2) deposits of lacustral interval 2; (3) deposits of lacustral interval 3; (4) deposits of lacustral interval 4; solid dots represent position of shell dates; dish-shapes represent position of hearth-charcoal dates; straight-line contacts are conformable; wavy-line contacts are unconformable.

to correlate these units by direct lateral tracing. Deposits of lacustral interval 3 (Fig. 4) are likewise almost continuous between the sections, with only a few interruptions. This unit is also lithologically distinct, differing from the other lacustral units in grain size, fossil content, and bedding characteristics, thereby facilitating correlation. It was impossible to trace the sediments of lacustral units 2 or 1 (Fig. 4) between the two sections because of poor exposures. Sediments of lacustral interval 2 appear to have been eroded from section B. A correlation of deposits representing interval 1 at both sections is based on similarities in sedimentary structures, position and kind of fossils, and similarity in radiocarbon dates.

At another radiocarbon-dated stratigraphic section, designated locality C and located 30 km south of locality A (Figs. 3 and 4), lacustrine and fluvial sediments are interbedded. There is more erosion in this area and only two radiocarbon samples were collected. Correlation with other localities is tentative and based solely on radiocarbon dates. The interpretations hinge mainly on the stratigraphy and dating at localities A and B.

Radiocarbon Dating

Fourteen new radiocarbon samples were collected and analyzed from the three stratigraphic exposures (Fig. 4; Table 1). Dates were obtained for aragonitic freshwater mussel shells (*Anodonta*) and charcoal. Only paired *Anodonta* were collected from lacustrine deposits and the charcoal

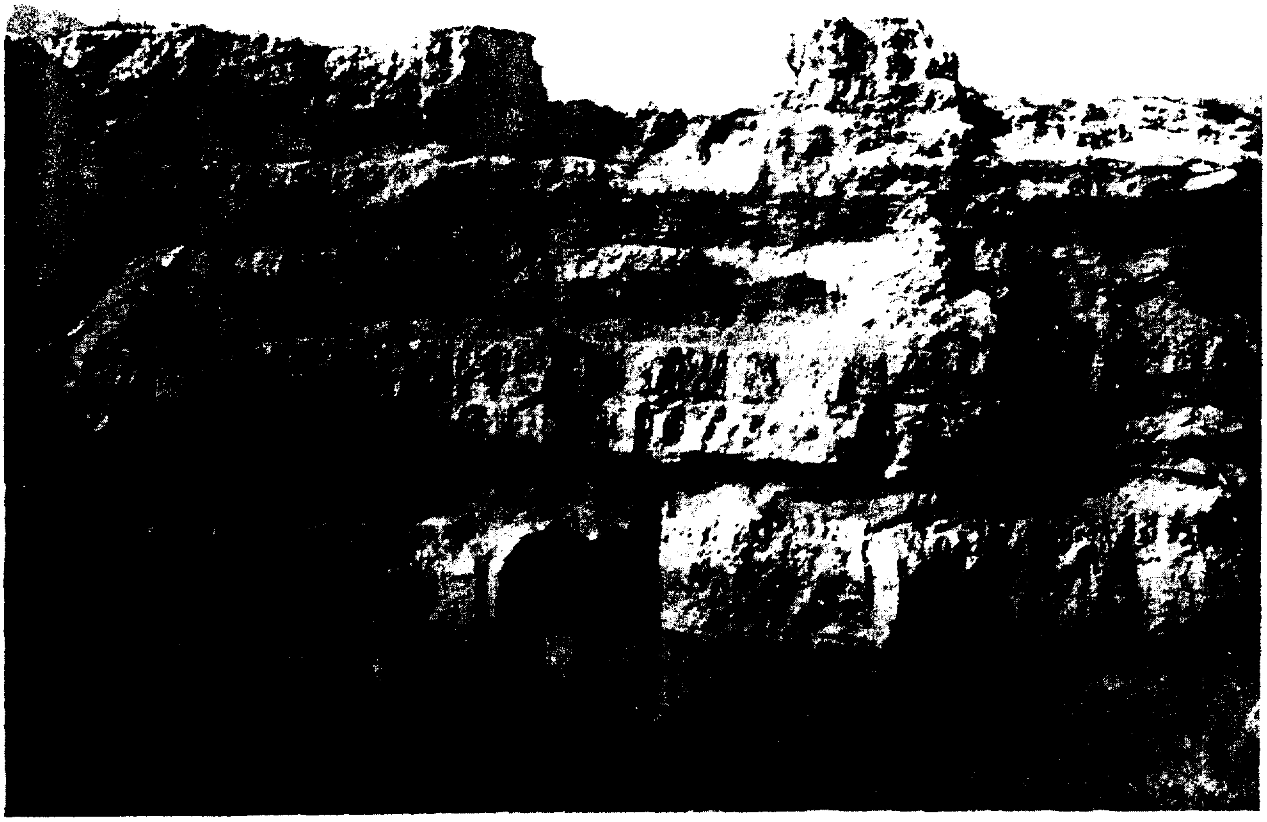

FIG. 5. Deposits of lacustral intervals 1–4 at locality A. Fluvial deposits are undercut and lacustrine deposits protrude. Shovel (center) rests on deposits of lacustral interval 2.

was collected from archaeological hearths interstratified between or within lacustrine sediments. All samples received a $\delta^{13}C$ analysis to correct for carbon-isotope fractionation and have been corrected for atmospheric variations in radiocarbon (Stuiver, 1982). Whenever possible radiocarbon samples were collected from correlative units at different localities in order to determine more reliably the age of a lacustral event.

The accuracy and precision to which the lacustral intervals can be dated is limited to a great extent by the accuracy and precision of the radiocarbon dates. The first constraint is imposed by the material dated. Charcoal dates are superior to shell dates and yield more reliable results because sources of contamination (i.e., $CaCO_3$ and humates) can be removed and corrections made for inherent methodological limitations (i.e., carbon-isotope fractionation and atmospheric variation in radiocarbon). The only unknown is the age of the wood prior to pyrolization. The inorganic fraction of shell can yield finite dates but it generally is less reliable than charcoal. Interpretation of such dates is much more difficult because they are subject to many avenues of contamination that cannot be fully evaluated.

A major limitation to interpreting shell dates is the initial $^{14}C/^{12}C$ ratio of the carbonate (Broecker and Orr, 1958). The $^{14}C/^{12}C$ ratio of the shell at the time of formation must have been equal to the $^{14}C/^{12}C$ ratio of atmospheric CO_2 at that time, if the radiocarbon date is to be accurate. If some of the bicarbonate utilized during shell precipitation was derived from older carbonates, the initial $^{14}C/^{12}C$ ratio of the shell would be less than the ratio for atmospheric CO_2. The result would be ^{14}C date greater than the age of the shell.

TABLE 1. RADIOCARBON DATES FOR LAKE CAHUILLA

Sample No.	Sample type	Uncorrected ^{14}C value[a] (yr B.P.)	^{13}C value[b] (‰)	^{14}C value[c] corrected for fractionation (yr B.P.)	Dendro-age date calibrated for atmospheric variations in ^{14}C
Lacustral interval 1					
UCR-990	Charcoal	1340 ± 100	−20.2	1265 ± 100	695 to 770 ± 100[d]
UCR-991	Charcoal	1150 ± 100	−25.0	1150 ± 100	890 ± 100[d]
UCR-996	Shell	1545 ± 100	−4.5	1200 ± 100	780 to 850 ± 100[d]
UCR-999	Shell	1615 ± 100	−4.0	1280 ± 100	690 to 760 ± 100[d]
UCR-987	Shell	1650 ± 100	−5.6	1340 ± 100	665 ± 100[d]
Lacustral interval 3					
UCR-992	Charcoal	770 ± 100	−17.8	655 ± 100	1300 ± 100[d]
UCR-995	Charcoal	750 ± 100	−20.8	680 ± 100	1290 ± 100[d]
UCR-994	Charcoal	700 ± 100	−19.6	615 ± 100	1315 ± 100[d]
UCR-993	Shell	1295 ± 100	−3.1	945 ± 100	1035 to 1100 ± 100[d]
UCR-998	Shell	1190 ± 100	−2.7	835 ± 100	1210 ± 100[d]
Lacustral interval 4					
UCR-986	Shell	820 ± 100	−4.3	490 ± 100	1430 ± 100[d]
UCR-997	Shell	780 ± 100	−4.4	450 ± 100	1430 ± 100[d]
Other lacustral intervals					
UCR-1000	Shell	2630 ± 120	−3.5	2285 ± 120	400 ± 125[e]
UCR-1101	Shell	2600 ± 120	−2.3	2300 ± 120	420 ± 125[e]

[a] Expressed with respect to 0.95 NBS oxalic acid standard $t_{1/2}$ = 5568 yr, A.D. 1950 = 0 B.P.

[b] Expressed with respect to PDB standard. Error on values = ±0.2‰.

[c] Normalized to −25.0‰.

[d] A.D., Striver, 1982.

[e] B.C., Suess, 1970.

A second limitation in dating shell is postdepositional surface contamination by secondary ^{14}C (Broecker and Orr, 1958). Significant errors can result from the exchange of atmospheric CO_2 with the surface layers of $CaCO_3$ and result in a date younger than the true age of the shell. A similar exchange can occur with dead carbon resulting in a date that is too old. This limitation is not a problem with the late Holocene shell samples because they were leached with hydrochloric acid during pretreatment prior to radiocarbon analysis. This removed the chalk-like rind on the shells leaving only the unexchanged aragonitic portions of the shell to be dated.

The most probable source of error for the late Holocene shell samples involves the first limitation. Corrections for fractionation were obtained to minimize this error and the accuracy of the shell dates was compared with charcoal dates in some cases. However, this source of error remains a problem, as seen most notably in sample UCR-993 and to a lesser degree in the other shell samples.

Another factor limiting the precision of the lacustrine chronology based on radiocarbon dates is the well-documented atmospheric variations in radiocarbon. In many cases a sample with a given ^{14}C activity expressed in radiocarbon years B.P. will actually represent a number of possible calendar ages as much as 200 yr apart because of the variations in ^{14}C production through time. Combined with the statistical error already involved, this factor results in a reduced precision for the lacustrine chronology. The original proposed chronology (Waters, 1982b) was presented in radiocarbon years B.P. and not corrected for atmospheric variations in radiocarbon. The chronology presented here is given in calendar years.

Six previously reported radiocarbon dates of charcoal from archaeological sites provide supplementary chronological evidence. Other previously reported radiocarbon dates (Weide, 1976b; Wilke, 1978) of fishbone, human coprolites, tufa, tule charcoal, seeds, and shell are of little use because the relationship of these diverse materials from many different contexts to past lake levels is not easily demonstrated.

Sedimentation Rates

Lacustrine sedimentation rates for paleolakes of the Salton Trough were calculated and used in conjunction with the radiocarbon dates to determine the approximate time represented by lacustrine deposits at radiocarbon-dated section A. A sedimentation rate was calculated for locality A based on the maximum thickness of lacustrine sediments representing lacustral interval 1 (Fig. 4). This unit is well controlled in time by three radiocarbon dates of charcoal and shell with two additional shell dates in correlative deposits at localities B and C.

In order to estimate a rate of sedimentation for a given lacustrine unit and apply it to other lacustrine deposits at the same section, it was necessary to assume that net lacustrine sedimentation remained relatively constant at this location (given the same environmental conditions) and that later erosion did not greatly reduce the thickness of the lacustrine deposits.

The lacustrine deposits at locality A (all except interval 3) are thin, horizontally laminated, very-fine sand and silt, with no recognizable unconformities. This and the absence of coarse sediment suggests that the former assumption may be valid. Sediments representing lacustral interval 3 are characterized by ripple-laminated sediments and have recognizable unconformities. The sedimentation rate cannot thus be applied with confidence to this unit. Maximum thicknesses were measured to overcome the erosion problem and localities were chosen away from areas next to mountain fronts where erosion was obvious.

The maximum thickness of the sediments representing interval 1 at locality A were divided by the difference between the two dated hearth-charcoal samples that lay immediately above and below this unit. Because the lower charcoal date at locality A may represent a calendar date of A.D. 695 to 770 the sedimentation rate can vary from a minimum of 0.3 cm/yr to a maximum of 0.5 cm/yr. I believe that the date of A.D. 695 and thus the sedimentation rate of 0.3 cm/yr is more reasonable based on associated evidence. Dates of A.D. 665 of shell at locality C and A.D. 650 of charcoal from an archaeological site associated with burned fishbone and shell on the 12-m shoreline indicate lacustrine conditions at this time. This rate is applied to the other lacustrine deposits (except interval 3) at locality A to estimate the approximate time represented by the deposits.

Because the lacustrine deposits at localities A, B, and C lie near sea level, they record that part of the lacustrine sequence deposited after Lake Cahuilla rose above sea level to the 12-m shoreline and later receded to sea level. As noted, Wilke (1978) calculated that 60 yr would be necessary to desiccate Lake Cahuilla completely from the 12-m shoreline. Based on his estimated rate of recession of 1.8 m/yr, approximately 10 yr would be required for Lake Cahuilla to receded from an altitude of 12 m to sea level, the altitude of the stratigraphic localities. An additional 50 yr would be necessary to desiccate Lake Cahuilla completely from sea level. Thus, 50 yr should be added to the time represented by each lacustrine deposit in order to record the total duration of a given lacustral interval from initial rise to complete desiccation.

Other Evidence

Both historical records and the sedimentological history of the Gulf of California provide evidence concerning the timing of incursions of the Colorado River into the Salton Trough.

Historical records provide a minimum age for the latest termination of Lake Cahuilla (Wilke, 1978). Observations by Spanish explorers indicate that the Colorado River has maintained its present course from Yuma to the Gulf of California since A.D. 1540. Explorers noting the position of the Colorado River include Díaz and Alarcón, in A.D. 1540; Oñate, in 1604–1605; Kino, in 1700, 1702, and 1706; Ugarte, in 1721; Consag, in 1746; Garcés, in 1771; Fages, in 1772; Taravál, in 1773; and Anza, in 1774. Expeditions into this region became common after A.D. 1774. It is clear from Wilke's (1978) summary that the Colorado River was not flowing into the Salton Trough after A.D. 1540 at the latest.

The late Holocene sedimetological history of the Gulf of California provides evidence concerning the timing of incursions of the Colorado River into the Salton Trough. Whenever the Colorado River flowed south large amounts of sediment were transported to the gulf, resulting in mudflat accretion (Thompson, 1968). Reworking of gulf sediments and shoreline formation occurred whenever the amount of sediment reaching the gulf was reduced; such periods probably resulted from the intermittent diversion of the Colorado River into the Salton Trough (i.e., the trough then became the dumping ground of the Colorado River). Thompson (1968) has demonstrated three periods of sediment curtailment and shoreline formation separated by mudflat accretion during the late Holocene. The earliest recorded period of reduced sediment transport occurred between 1050 and 250 B.C. and is manifest in the formation of shoreline 1 (Stage II). Mudflat accretion occurred before and after this time (Stages I and III, respectively). Another period of low sediment supply to the gulf is expressed by the development of shoreline 2 (Stage IV), initiated sometime between A.D. 450 and 950 based on 17 radiocarbon dates from this shoreline. Mudflat accretion (Stage V) again occurred sometime after the formation of shoreline 2 and has since ended with the development of shoreline 3 (Stage VI), the modern coastline.

LATE HOLOCENE LACUSTRINE CHRONOLOGY

Deposits of the first lacustral interval are directly dated by five radiocarbon samples (Figs. 4 and 6; Table 1). Deposits of this interval are composed of thin, horizontally laminated, very-fine sand, silt, and clay and are present at localities A, B, and C (Fig. 4).

An archaeological hearth-charcoal sample in fluvial sediments 10 cm below the lower lacustrine contact at locality A dated 1265 ± 100 yr B.P. or A.D. 695–770 (UCR-990). Two dates of aragonitic *Anodonta* from the lower 10 cm of correlative lacustrine deposits at localities A and B were dated 1200 ± 100 yr B.P. or A.D. 780–850 (UCR-996) and 1280 ± 100 yr B.P. or A.D. 690–760 (UCR-999), respectively. Another charcoal sample from a hearth directly overlying the lacustrine unit at locality A was dated 1150 ± 100 yr B.P. or A.D. 890 (UCR-991). A date of 1340 ± 100 yr B.P. or A.D. 665 (UCR-987) was obtained for aragonitic *Anodonta* at locality C from deposits believed to correlate with those at localities A and B.

The lower charcoal date at locality A indicates non-lacustrine conditions sometime between A.D. 695 and 770. However, lacustrine conditions are indicated as early as A.D. 665 at locality C and A.D. 650 (LJ-105) from an archaeological site associated with burned fishbone and shell on the 12-m shoreline. This contradiction is a result of the accuracy and precision of the radiocarbon dates. An approximate date for the filling of Lake Cahuilla can be estimated by accepting the earliest date of A.D. 695 as correct for the lower charcoal date, which indicates non-lacustrine conditions, and by realizing that the dates of A.D. 650 and 665, which indicate lacustrine conditions, can deviate by 100 yr. In light of these dates and the considerations previously discussed, Lake Cahuilla probably began to fill sometime around A.D. 700. The other shell dates of A.D. 690–760 and 780–880 are in accord

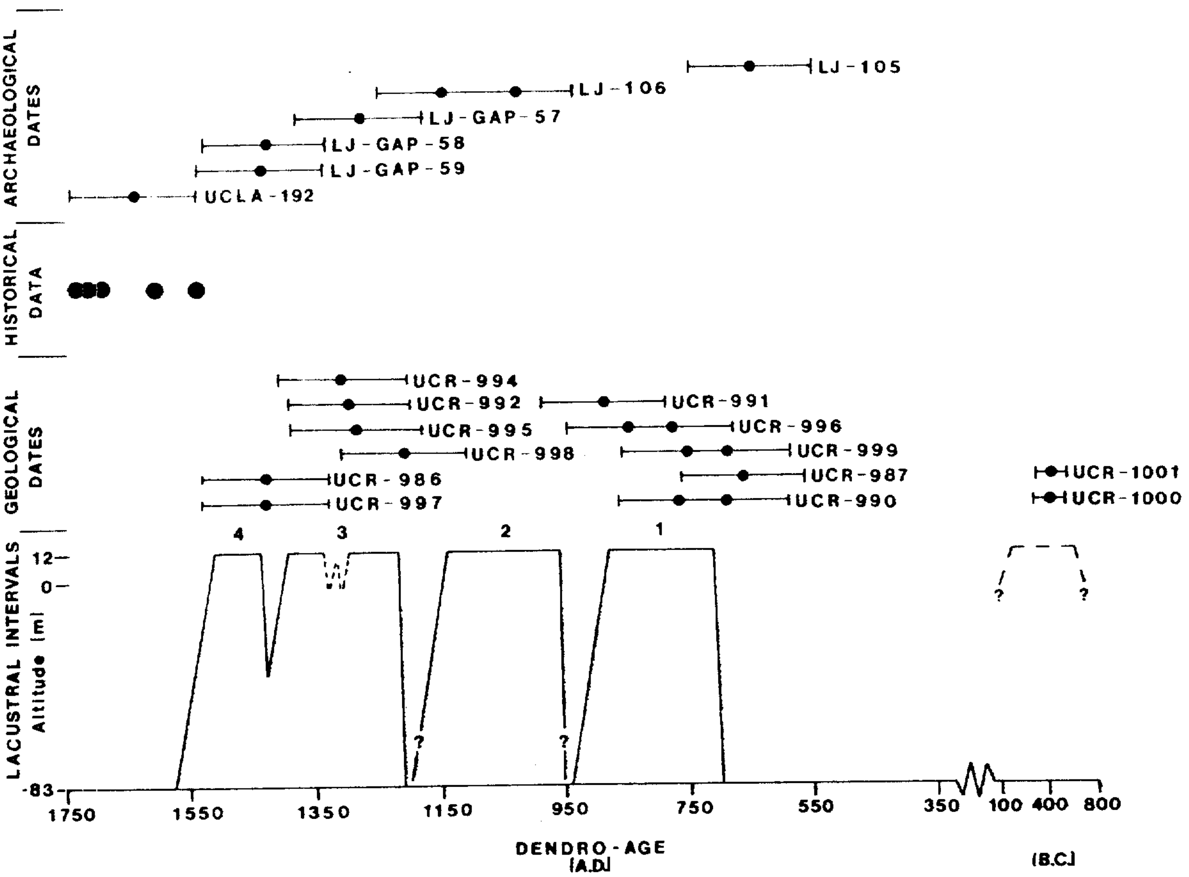

FIG. 6. Late Holocene lacustrine chronology of Lake Cahuilla. The trapezoidal-shaped outlines represent the lacustral intervals. The right line of the trapezoid represents the initial filling of Lake Cahuilla from −83 to +12 m. The top horizontal line represents the amount of time the lake stood at 12-m altitude. The left line of the trapezoid represents the recession of the lake from 12 to −83 m (complete desiccation). Solid lines represent firm chronologic placement of the lacustral interval; dashed lines represent tentative chronologic placement or duration of a lacustral interval. The large solid dots represent the time of Spanish reports on the position of the Colorado River.

with this interpretation. The proposed date of lake formation occurs during the initiation of stage IV of Thompson's tidal flat sequence, a period of sediment curtailment to the Gulf of California.

The date of A.D. 890 from a hearth-charcoal sample at the top of the lacustrine deposit at locality A serves as a minimum date for the lowering of the water level from its maximum altitude of 12 m to sea level. Based on Wilke's estimate that Lake Cahuilla desiccated at a rate of 1.8 m/yr, an additional 50 yr would be required to dry the lake completely. This would place the end of this lacustral interval at approximately A.D. 940 assuming the lake totally evaporated.

Deposits of the second lacustral interval occur only at locality A and are not directly dated (Figs. 4 and 6). Because this unit lies between deposits of lacustral intervals 1 and 3, it must have occurred sometime between A.D. 940 and 1210. Calculations based on the rate of sedimentation and thickness of sediment at locality A suggest that 200 yr elapsed between the lake's initial rise and its later recession to sea level. Because an additional 50 yr would be necessary to desiccate the lake completely from sea level, the total length of this interval was approximately 250 yr. Complete desiccation of Lake Cahuilla could have occurred between this lacustral interval and lacustral intervals 1 and 3. Possibly this lacustral interval was associated with either lacustral interval 1 or 3 and actually records a major recession between one of them, rather than complete desiccation between both.

Deposits of the third lacustral interval are directly dated and occur at localities A and B (Figs. 4 and 6; Table 1). They are characterized by ripple-laminated, very-fine sand and silt; several coarse sand lenses are interbedded with massive silts to very fine sands. The sediments indicate that Lake Cahuilla was unstable during this time, fluctuating from its maximum at 12 m down to, or below, sea level. Interstratified with the ripple-laminated silts are three hearths containing burned fishbone and shell. Two charcoal samples from hearths in the lower third of this unit along a minor unconformity date to 680 ± 100 yr B.P. or A.D. 1290 (UCR-995) and 655 ± 100 yr B.P. or A.D. 1300 (UCR-992). The other hearth, in the upper third of the lacustrine deposits, dated 615 ± 100 yr B.P. or A.D. 1315 (UCR-994). One sample of aragonitic *Anodonta* shells collected stratigraphically above the hearth dating 655 yr B.P. has an age of 945 ± 100 yr B.P. or A.D. 1035–1100 (UCR-993). Another shell sample from the lower 10 cm of the unit at locality B dates to 835 ± 100 yr B.P. or A.D. 1210 (UCR-998). A minimum of 200 yr of deposition are recorded by the lacustrine deposits at locality A based on calculations using the sedimentation rate. The hiatus of the unconformities cannot be evaluated, so this estimate represents a minimum. A beginning date of approximately A.D. 1210 is adopted for this interval based on the shell date which indicates lacustrine conditions at this time. All charcoal and shell dates are in accord with this estimate. This lacustral interval is separated from lacustral interval 4 by a major recession of the lake, but not total desiccation. The lake probably dropped close to an altitude of −40 m before it began to rise again, marking the beginning of lacustral interval 4.

Deposits of the last, or fourth, lacustral interval are directly dated by two aragonitic *Anodonta* samples obtained from the base of lacustrine deposits at localities B and C (Figs. 4 and 6; Table 1). These dates are 490 ± 100 yr B.P. or A.D. 1430 (UCR-986) and 450 ± 100 yr B.P. or A.D. 1430 (UCR-997), respectively. Calculations based on the rate of sedimentation and thickness of this unit at locality A indicate that 100 yr elapsed between the rise of the lake above sea level and the recession of the lake below sea level. The horizontally laminated, very-fine sand to clay texture of the sediments suggest that the lake was at its maximum altitude (12 m) during all this time. There is no indication of shallow water or fluvial deposition. A beginning date of A.D. 1430 for this last lacustral interval is based on the two basal shell dates. The termination date of A.D. 1580 is based on the estimated duration of the lacustral interval plus 50 yr. Historical evidence indicating that Lake Cahuilla was no longer receiving discharge from the Colorado River after A.D. 1540 corresponds closely to this independently determined termination date of Lake Cahuilla. The termination of Lake Cahuilla is also marked by renewed mudflat deposition (Stage V) in the Gulf of California.

In summary there were four lacustral intervals in the last 2000 yr during which the lake rose to the 12-m shoreline; they were separated by complete or partial desiccation. The lacustral intervals occurred between A.D. 700 and 1580. Because of the nature of the data, the ages of the lacustral intervals are probably accurate to ± 100 yr.

Two late Holocene lacustral intervals antedate the four previously discussed intervals. Two samples of aragonitic *Anodonta* shells from two lacustral deposits at locality B (Figs. 4 and 6; Table 1) dated 2285 ± 120 yr B.P. or 400 B.C. (UCR-1000) and 2300 ± 120 yr B.P. or 420 B.C. (UCR-1001). The importance of these dates is that they indicate that there were probably no lacustral intervals between A.D. 1 and 700. Additional support indicating that the Colorado River was probably flowing south to

TABLE 2. RADIOCARBON DATES FROM ARCHAEOLOGICAL SITES ASSOCIATED WITH LAKE CAHUILLA

Sample no.	Sample type	Uncorrected ^{14}C value (yr B.P.)	Dendro-age date calibrated for atmospheric variations in $^{14}C^a$
LJ-105	Charcoal	1440 ± 100	650 ± 100
LJ-106	Charcoal	960 ± 100	1030 or 1150 ± 100
LJ-GAP-57	Charcoal	720 ± 100	1280 ± 100
LJ-GAP-59	Charcoal	470 ± 100	1440 ± 100
LJ-GAP-58	Charcoal	420 ± 100	1430 ± 100
UCLA-192	Charcoal	270 ± 60	1640 ± 60

[a] A.D., Stuiver, 1982.

the gulf during this time is provided by Thompson's work (1968) which shows that mudflat accretion occurred from 250–1050 B.C. to A.D. 490–950. These dates also indicate that other lacustral intervals, during which water rose to the 12-m shoreline, occurred before A.D. 1, but without more radiocarbon control further interpretation is not possible.

ARCHAEOLOGY OF LAKE CAHUILLA

Numerous Lowland Patayan archaeological sites, containing large amounts of locally made pottery, ground-and-chipped stone artifacts, and other archaeological features, are temporally associated with the 12-m shoreline of Lake Cahuilla (Rogers, 1945; Wilke, 1978; Waters, 1982a). Six radiocarbon dates of charcoal (Table 2) from four archaeological sites have been reported. Charcoal dates are emphasized because of their superior reliability and consistency compared to other dated materials and only those dates with a standard deviation of 100 yr or less were used. These dates approximately correspond to individual lacustral intervals.

The oldest date, 1440 ± 100 yr B.P. or A.D. 650 (LJ-105) (Hubbs *et al.*, 1960), comes from a site on the eastern shoreline and is associated with bones of freshwater fish. The occupation of this site appears to be coincident with the first lacustral interval. The next older date, 960 ± 100 yr B.P. or A.D. 1030 or 1150 (LJ-106) (Hubbs *et al.*, 1960), is from a shoreline site that probably correlates with the second lacustral interval. A date of 720 ± 100 yr B.P. or A.D. 1280 (LJ-GAP-57) (Hubbs and Bien, 1967) was reported from a shoreline site that contained fishbone and pottery. The occupation of this site approximately coincided with the third lacustral interval. The occupation of a site dated 470 ± 100 yr B.P. or A.D. 1440 (LJ-GAP-59) (Hubbs and Bien, 1967) and 420 ± 100 yr B.P. or A.D. 1430 (LJ-GAP-58) (Hubbs and Bien, 1967) corresponds approximately with the suggested dates for the last lacustral interval of Lake Cahuilla.

A date of 270 ± 60 yr B.P. or A.D. 1640 (UCLA-192) (Fergusson and Libby, 1963) was reported from a site located 55 m below sea level, in the lake bottom. The occupation of this site postdates the existence of Lake Cahuilla.

CONCLUSIONS

The Salton Trough of southern California was a region of environmental extremes, shifting from desert to lacustrine environments during the late Holocene. Freshwater lakes formed whenever the Colorado River was diverted westward into the trough instead of south to the Gulf of California. The various stands of the lake are collectively known as Lake Cahuilla.

Strandline features of late Holocene Lake Cahuilla occur at an altitude of 12 m. The maximum altitude of filling of Lake Cahuilla was geomorphically, rather than climatically, controlled. This lake had a surface area of over 5700 km^2 and a maximum depth of 95 m. A hydrologic budget of the lake indicates that only half of the discharge of the Colorado River was necessary to maintain this freshwater lake at the 12-m level under present conditions of evaporation and precipitation. Any excess discharge overflowed the delta at Cerro Prieto. Following diversion of the river back to the Gulf of California, Lake Cahuilla evaporated, becoming totally desiccated within about 60 yr.

Four lacustral intervals, during which the lake reached to the 12-m shoreline, occurred during the last 2000 yr. No lacustral intervals have been identified between A.D. 1 and 700, but an unknown number of lacustral stands occurred prior to A.D. 1.

Lowland Patayan archaeological sites are associated with the 12-m shoreline and appear to correlate temporally with the four lacustral intervals.

ACKNOWLEDGMENTS

C. V. Haynes, W. B. Bull, and J. F. Schreiber provided helpful criticisms and assistance throughout the course of the project. C. A. Wallace supplied topographic map coverage of the study area. E. L. Davis, R. L. Carrico, and D. R. Gallegos were instrumental in obtaining funding for radiocarbon dating. Financial support for field studies and radiocarbon dating was received from the Geological Society of America (Research Grant 2552-79); the Great Basin Foundation, San Diego; the Graduate College Program Development Fund, the University of Arizona, Tucson; and WESTEC Services, Inc., San Diego. G. R. Brakenridge, D. L. Weide, S. C. Porter, and an anonymous reviewer furnished suggestions and criticisms. I would especially like to thank my wife, Susan McKinney Waters, for her support during the course of the project and for typing the final version of this paper.

REFERENCES

Blake, W. P. (1854). Ancient lake in the Colorado Desert. *American Journal of Science* **17**, 435–438.

Blake, W. P. (1907). Lake Cahuilla. *National Geographic Magazine* **18**, 830.

Broecker, W. S., and Orr, P. C. (1958). Radiocarbon chronology of Lake Lahontan and Lake Bonneville. *Geological Society of America Bulletin* **69**, 1009–1032.

Crane, H. R., and Griffin, J. B. (1958). University of Michigan radiocarbon dates, III. *Science* **128**, 1117–1123.

Fergusson, G. J., and Libby, W. F. (1963). UCLA radiocarbon dates, II. *Radiocarbon* **5**, 1–22.

Hely, A. G. (1969). "Lower Colorado River Water Supply—Its Magnitude and Distribution." United States Geological Survey Professional Paper 486-D.

Hely, A. G., Hughes, G. H., and Irelan B. (1966). "Hydrologic Regimen of Salton Sea, California." United States Geological Survey Professional Paper 486-C.

Hubbs, C. L., and Bien, G. S. (1967). La Jolla natural radiocarbon measurements, V. *Radiocarbon* **9**, 261–294.

Hubbs, C. L., Bien, G. S., and Suess, H. E. (1960). La Jolla natural radiocarbon measurements. *American Journal of Science, Radiocarbon Supplement* **2**, 197–223.

Merriam, R., and Bandy, O. L. (1965). Source of upper Cenozoic sediments in Colorado Delta region. *Journal of Sedimentary Petrology* **35**, 911–916.

Rogers, M. J. (1945). An outline of Yuman prehistory. *Southwestern Journal of Anthropology* **1**, 167–198.

Stanley, G. M. (1962). Prehistoric lakes in the Salton Sea Basin *Geological Society of America Special Paper* **73**, 249–250 (Abstract).

Stanley, G. M. (1965). Deformation of Pleistocene Lake Cahuilla shoreline, Salton Basin, California *Geological Society of America Special Paper* **87**, 165 (Abstract).

Stuiver, M. (1982). A high-precision calibration of the A.D. radiocarbon time scale. *Radiocarbon* **24**, 1–26.

Suess, H. E. (1970). Bristlecone Pine calibration of the radiocarbon time-scale, 5200 B.C. to the present. *In* "Radiocarbon Variations and Absolute Chronology" (I. U. Olsson, Ed.), pp. 303–311. Proceedings of the Twelfth Nobel Symposium, Uppsala, Sweden, 1969.

Thomas, H. E., Gould, H. R., Langbein, W. B., and Clayton, T. (1960). Life of the reservoir. *In* "Comprehensive Survey of Sedimentation in Lake Mead, 1948–49," pp. 231–244. United States Geological Survey Professional Paper 295.

Thompson, R. W. (1968). Tidal flat sedimentation of the Colorado River delta, northwestern Gulf of California. *Geological Society of America Memoir* **107**.

Van de Kamp, P. C. (1973). Holocene continental sedimentation in the Salton Basin, California, a reconnaissance. *Geological Society of American Bulletin* **84**, 827–848.

Waters, M. R. (1980). "Lake Cahuilla; Late Quaternary Lacustrine History of the Salton Trough, California." M.S. thesis, University of Arizona, Tucson.

Waters, M. R. (1982a). The Lowland Patayan ceramic tradition. *In* "Hohokam Patayan: Prehistory of Southwestern Arizona" (R. H. McGuire, and M. B. Schiffer, Eds.), pp. 275–298. Academic Press, New York.

Waters, M. R. (1982b). Late Quaternary lacustrine chronology and archaeology of ancient Lake Cahuilla, California *American Quaternary Association, Seventh Biennial Meeting Abstracts and Program, 1982,* 176 (abstract).

Weide, D. L. (1976a). Regional environmental history of the Yuha Desert. *In* "Background to Prehistory of the Yuha Desert Region" (P. J. Wilke, Ed.), pp. 9–20. *Ballena Press Anthropological Papers* 5.

Weide, D. L. (1976b). Summary of radiometric dates from the Salton Sink region. *In* "Background to Prehistory of the Yuha Desert Region." (P. J. Wilke, Ed.), pp. 95–97. *Ballena Press Anthropological Papers* 5.

Wilke, P. J. (1978). Late prehistoric human ecology at Lake Cahuilla, Coachella Valley, California. *Contributions of the University of California Archaeological Research Facility* 38.